Courtesy of CMA/Flodyne/Hydradyne ▪ Motion Control ▪ Hydraulic ▪ Pneumatic ▪ Electrical ▪ Mechanical ▪ (800) 426-5480 ▪ www.cmafh.com

Electric Drives and Controls | Hydraulics | Linear Motion and Assembly Technologies | Pneumatics | Service

Rexroth
Bosch Group

Rexroth IndraDrive Mi Drive Systems With KCU01, KSM01, KMS01

R911320924
Edition 04

Project Planning Manual

Courtesy of CMA/Flodyne/Hydradyne ▪ Motion Control ▪ Hydraulic ▪ Pneumatic ▪ Electrical ▪ Mechanical ▪ (800) 426-5480 ▪ www.cmafh.com

Title Rexroth IndraDrive Mi
Drive Systems
With KCU01, KSM01, KMS01

Type of Documentation Project Planning Manual

Document Typecode DOK-INDRV*-KCU+KSM****-PR04-EN-P

Internal File Reference RS-0ed5749a3227cd6a0a6846a00051a3ec-4-en-US-3

Record of Revision

Edition	Release Date	Notes
DOK-INDRV*-KCU+KSM****-PR04-EN-P	2010/03	See index entry "Documentation → Editions"

Copyright © Bosch Rexroth AG 2010

Copying this document, giving it to others and the use or communication of the contents thereof without express authority, are forbidden. Offenders are liable for the payment of damages. All rights are reserved in the event of the grant of a patent or the registration of a utility model or design (DIN 34-1).

Validity The specified data is for product description purposes only and may not be deemed to be guaranteed unless expressly confirmed in the contract. All rights are reserved with respect to the content of this documentation and the availability of the product.

Published by Bosch Rexroth AG
Bgm.-Dr.-Nebel-Str. 2 ■ D-97816 Lohr a. Main
Telephone +49 (0)93 52/ 40-0 ■ Fax +49 (0)93 52/ 40-48 85
http://www.boschrexroth.com/
Dept. DCC/EDY1 (RR/US/BB), DCC/EDM2 (JW)

Note This document has been printed on chlorine-free bleached paper.

Table of Contents

Page

1 System Presentation ... 9
1.1 Introduction ... 9
1.1.1 Rexroth IndraDrive Mi ... 9
1.1.2 Features ... 9
Distributed Servo Drive KSM ... 9
Distributed Drive Controller KMS ... 10
Combination of KSM and KMS ... 10
Differences to Rexroth IndraDrive and Rexroth IndraDyn ... 11
1.2 Drive System Rexroth IndraDrive Mi ... 11
1.2.1 Components ... 11
General Information ... 11
Lines ... 13
1.2.2 Firmware ... 13
1.2.3 System Structure ... 13
1.2.4 Overview of Functions ... 15
Firmware Functions (Functional Packages) ... 15
1.3 Type Code ... 15
1.3.1 Introduction ... 15
1.3.2 Distributed Servo Drive KSM ... 16
Type Code ... 16
Explanation of the Type Code ... 17
1.3.3 Distributed Drive Controller KMS ... 19
Type Code ... 19
1.3.4 Electronic Control System KCU ... 20
Type Code ... 20
1.3.5 Firmware ... 20
1.4 About This Documentation ... 21
1.4.1 Document Structure ... 21
1.4.2 Editions ... 21
1.4.3 Reference Documentations ... 21
Drive Systems, System Components ... 21
Motors ... 22
Cables ... 23
Firmware ... 23
1.4.4 Your Feedback ... 24

2 Important Directions for Use ... 25
2.1 Appropriate Use ... 25
2.1.1 Introduction ... 25
2.1.2 Areas of Use and Application ... 25
2.2 Inappropriate Use ... 26

Courtesy of CMA/Flodyne/Hydradyne ▪ Motion Control ▪ Hydraulic ▪ Pneumatic ▪ Electrical ▪ Mechanical ▪ (800) 426-5480 ▪ www.cmafh.com

Courtesy of CMA/Flodyne/Hydradyne ▪ Motion Control ▪ Hydraulic ▪ Pneumatic ▪ Electrical ▪ Mechanical ▪ (800) 426-5480 ▪ www.cmafh.com

Table of Contents

Page

3 Safety Instructions for Electric Drives and Controls ... 27
3.1 Definitions of Terms ... 27
3.2 General Information ... 28
3.2.1 Using the Safety Instructions and Passing Them on to Others ... 28
3.2.2 Requirements for Safe Use ... 28
3.2.3 Hazards by Improper Use ... 29
3.3 Instructions with Regard to Specific Dangers ... 30
3.3.1 Protection Against Contact with Electrical Parts and Housings ... 30
3.3.2 Protective Extra-Low Voltage as Protection Against Electric Shock ... 31
3.3.3 Protection Against Dangerous Movements ... 31
3.3.4 Protection Against Magnetic and Electromagnetic Fields During Operation and Mounting ... 33
3.3.5 Protection Against Contact With Hot Parts ... 33
3.3.6 Protection During Handling and Mounting ... 33
3.3.7 Battery Safety ... 34
3.3.8 Protection Against Pressurized Systems ... 34
3.4 Explanation of Signal Words and the Safety Alert Symbol ... 35

4 General Data and Specifications ... 37
4.1 Acceptance Tests and Approvals ... 37
4.2 Transport and Storage ... 39
4.2.1 Transport of the Components ... 39
4.2.2 Storage of the Components ... 39
4.3 Installation Conditions ... 40
4.3.1 Ambient and Operating Conditions ... 40
4.3.2 Mounting Position ... 44
Mounting Positions of Components ... 44
Mounting Positions of Motors ... 44
4.3.3 Compatibility With Foreign Matters ... 45
4.3.4 Prime Coat and Varnish of Motor Housings ... 46
4.4 Voltage Test and Insulation Resistance Test ... 46
4.5 Control Voltage (24V Supply) ... 47

5 Technical Data of the Components ... 49
5.1 Explanation of Terms and Definitions ... 49
5.2 Distributed Servo Drive KSM ... 53
5.2.1 Data Sheet KSM ... 53
5.2.2 KSM Characteristics ... 57
5.2.3 Dimensions and Technical Design ... 60
Dimensions ... 60
Technical Design ... 64
5.2.4 Bearing Load and Shaft Load ... 64
5.3 Distributed Drive Controller KMS ... 66
5.3.1 Brief Description and Usage ... 66
5.3.2 Data Sheet KMS ... 67
5.3.3 Dimensional Drawing KMS ... 69

Courtesy of CMA/Flodyne/Hydradyne ▪ Motion Control ▪ Hydraulic ▪ Pneumatic ▪ Electrical ▪ Mechanical ▪ (800) 426-5480 ▪ www.cmafh.com

Table of Contents

Page

5.4 Electronic Control System KCU ... 69
5.4.1 Brief Description and Usage ... 69
5.4.2 Data Sheet KCU ... 70
5.4.3 Dimensional Drawing KCU ... 73
5.5 Hybrid Cable RKH ... 73
5.5.1 Technical Data ... 73
5.6 Selecting Hybrid Cable for Appropriate Connection ... 74
5.7 Interconnection Diagrams for Ready-Made Hybrid Cables ... 77

6 Connection Points ... 83
6.1 Connection Points of System ... 83
6.1.1 Connection Point of Equipment Grounding Conductor ... 83
6.1.2 Ground Connection ... 84
6.2 Connection Points of KCU ... 85
6.2.1 Position of Connection Points ... 85
6.2.2 X1, Module Bus ... 86
6.2.3 X20 TX, X21 RX (SERCOS interface) ... 87
General Information ... 87
S6, SERCOS Transmission Power ... 88
6.2.4 X50, E-Stop Input ... 88
6.2.5 X51, Master Communication SERCOS ... 89
6.2.6 X52, Status Messages ... 89
6.2.7 X53, Control Voltage Output ... 90
6.2.8 X54, DC Bus, Equipment Grounding Conductor Output KSM/KMS ... 90
6.2.9 DC Bus Connection L+, L- ... 91
6.2.10 Control Voltage Supply +24V, 0V ... 93
6.3 Connection Points of KSM ... 94
6.3.1 Position of Connection Points ... 94
6.3.2 X2, Serial Interface, Service Input "Release brake" ... 95
6.3.3 X3.1, X3.2 Connection Point Hybrid Cable ... 97
6.3.4 X7, Connection Point MultiMediaCard ... 98
6.3.5 X37, X38, Digital Inputs/Outputs ... 99
6.3.6 Second Connection Point of Equipment Grounding Conductor ... 102
6.4 Connection Points of KMS ... 103
6.4.1 Position of Connection Points ... 103
6.4.2 X2, Serial Interface, Service Input "Release brake" ... 104
6.4.3 X3.1, X3.2, Connection Point Hybrid Cable ... 104
6.4.4 X7, Connection Point MultiMediaCard ... 104
6.4.5 X37, X38, Digital Inputs/Outputs ... 105
6.4.6 X104, Connection for Motor Encoder ... 105
6.4.7 X156, Connection for Motor ... 106
6.4.8 Second Connection Point of Equipment Grounding Conductor ... 106

7 Notes on Project Planning ... 107
7.1 Combining the Individual Components ... 107

Courtesy of CMA/Flodyne/Hydradyne ▪ Motion Control ▪ Hydraulic ▪ Pneumatic ▪ Electrical ▪ Mechanical ▪ (800) 426-5480 ▪ www.cmafh.com

Table of Contents

Page

7.1.1 Power Supply ... 107
Supply Units ... 107
7.1.2 Length of Hybrid Cable ... 108
7.1.3 Electronic Control System KCU ... 109
General Information ... 109
Control Voltage Supply ... 109
Number of KSM/KMS in the String of Drives ... 111
Power Supply KSM/KMS ... 113
7.1.4 Motor Blower for KSM ... 116
7.1.5 Evaluation of Motor Encoders at KMS ... 116
7.1.6 Length of Motor Cables and Encoder Cables at KMS ... 116
7.1.7 Operation With Standard Motors ... 116
7.2 Notes on Electrical Project Planning ... 117
7.2.1 SERCOS Address Selector Switches ... 117
7.2.2 Motor Current Limitation ... 118
7.2.3 Motor Temperature ... 119
7.2.4 Switching Frequency ... 119
7.3 Notes on Mechanical Project Planning ... 120
7.3.1 Mounting Space ... 120
7.3.2 Output Shaft ... 120
Plain Shaft ... 120
Output Shaft With Key ... 120
Output Shaft With Shaft Sealing Ring ... 121
7.3.3 Bearings and Shaft Load ... 122
General Information ... 122
Radial Load, Axial Load ... 123
Bearing Service Life ... 124
7.3.4 Holding Brakes ... 125
Brake Control and Supply ... 125
Safety Requirements ... 125
Sizing Holding Brakes ... 127
7.3.5 Mechanical Attachment of Driving Elements ... 127
General Information ... 127
Redundant Bearings ... 127
Gear Attachment ... 128
Coupling Attachment ... 128
Bevel Gear Pinions or Skew Bevel Driving Pinions ... 128

8 Identification ... 131
8.1 Scope of Supply ... 131
8.1.1 KCU ... 131
8.1.2 KSM ... 131
8.1.3 KMS ... 131
8.2 Identifying and Checking the Delivered Components ... 131
8.2.1 Type Plate KSM ... 131
Arrangement ... 131

Courtesy of CMA/Flodyne/Hydradyne ▪ Motion Control ▪ Hydraulic ▪ Pneumatic ▪ Electrical ▪ Mechanical ▪ (800) 426-5480 ▪ www.cmafh.com

Table of Contents

Page

Design ... 132
8.2.2 Type Plate KMS ... 133
Arrangement ... 133
Design ... 134
8.2.3 Type Plate KCU ... 135
Arrangement ... 135
Design ... 135

9 Mounting and Installation ... 137
9.1 Introduction ... 137
9.1.1 Important Notes ... 137
Safety ... 137
Qualified Technical Staff ... 137
Handling of the Devices ... 137
9.1.2 System Overview ... 138
Available Connections ... 138
9.1.3 Connection Diagram KCU ... 140
9.2 KSM ... 141
9.2.1 Required Steps to Follow ... 141
Preparations ... 141
Mounting KSM ... 141
9.2.2 Mechanical Interfaces ... 141
Flange Mounting ... 141
9.2.3 Practical Tips ... 142
9.2.4 Electrical Connection ... 142
General Information ... 142
Notes ... 143
Electrical Interfaces ... 143
9.3 KMS ... 148
9.3.1 Required Steps to Follow ... 148
Preparations ... 148
Mounting KMS ... 149
9.3.2 Practical Tips ... 149
9.3.3 Electrical Connection ... 149
9.4 KCU ... 149

10 Accessories ... 151
10.1 Overview ... 151
10.2 HAS01, Basic Accessory ... 151
10.3 HAS02, Strain Relief and Shield Connection ... 152
10.4 HAS03, Control Cabinet Adapter ... 152
10.5 RKB0006, Interface Cable ... 153
10.5.1 Usage ... 153
10.6 RKS0010, Interface Cable ... 154

Courtesy of CMA/Flodyne/Hydradyne ▪ Motion Control ▪ Hydraulic ▪ Pneumatic ▪ Electrical ▪ Mechanical ▪ (800) 426-5480 ▪ www.cmafh.com

Table of Contents

Page

11 Commissioning, Operation, Diagnoses and Maintenance ... 155
11.1 Notes on Commissioning ... 155
11.1.1 General Information ... 155
11.1.2 Preparation ... 155
11.1.3 How to Proceed ... 155
11.2 Notes on Operation ... 155
11.3 Diagnostic Functions ... 156
11.3.1 Diagnostic Display KSM/KMS ... 156
11.3.2 Electronic Control System KCU ... 157
11.3.3 Diagnostic Messages via Parameters ... 158
11.3.4 Firmware Functions ... 158
Easy Startup Mode ... 158
Analog Outputs ... 159
Oscilloscope Function ... 159
Patch Function ... 159
Monitoring Function ... 159
11.4 Service Functions / Troubleshooting ... 159
11.4.1 General Information ... 159
11.4.2 Replacement of Fuses F4 and F5 ... 159
11.4.3 Deactivating and Dismounting the Drive ... 160
Deactivation ... 160
Dismounting ... 161
11.4.4 Replacement of KSM or KMS ... 161
11.4.5 Service Function "Release Holding Brake" ... 162
11.4.6 Saving Parameters ... 162
11.4.7 Firmware Update ... 162
11.4.8 MMC ... 162
11.5 Maintenance ... 163
11.5.1 Maintenance of the Motor Component ... 163
General Information ... 163
Cleaning ... 163
Bearings ... 163
Connection Cables ... 164
Holding Brake–Commissioning and Maintenance Instructions ... 164
11.5.2 Maintenance of the Electronic System of the Drive ... 165

12 Environmental Protection and Disposal ... 167
12.1 Environmental Protection ... 167
12.2 Disposal ... 167

13 Service and Support ... 169

14 Appendix ... 171
14.1 Discharging of Capacitors ... 171
14.1.1 Discharging DC Bus Capacitors ... 171

Table of Contents

Page

14.1.2 Discharging Device ... 171
Operating Principle ... 171
Dimensioning ... 172
Installation ... 172
Activation ... 172

Index ... 173

Courtesy of CMA/Flodyne/Hydradyne ▪ Motion Control ▪ Hydraulic ▪ Pneumatic ▪ Electrical ▪ Mechanical ▪ (800) 426-5480 ▪ www.cmafh.com

Courtesy of CMA/Flodyne/Hydradyne ▪ Motion Control ▪ Hydraulic ▪ Pneumatic ▪ Electrical ▪ Mechanical ▪ (800) 426-5480 ▪ www.cmafh.com

1 System Presentation

1.1 Introduction

1.1.1 Rexroth IndraDrive Mi

Rexroth IndraDrive Mi is an innovative system solution within the Rexroth IndraDrive platform with

- Distributed servo drives **KSM**

  ⇒ Synchronous servo motors (on the basis of Rexroth IndraDyn S) with integrated inverters and control sections

- Distributed drive controllers **KMS**

  ⇒ Very compact inverters with control sections

1.1.2 Features

Distributed Servo Drive KSM

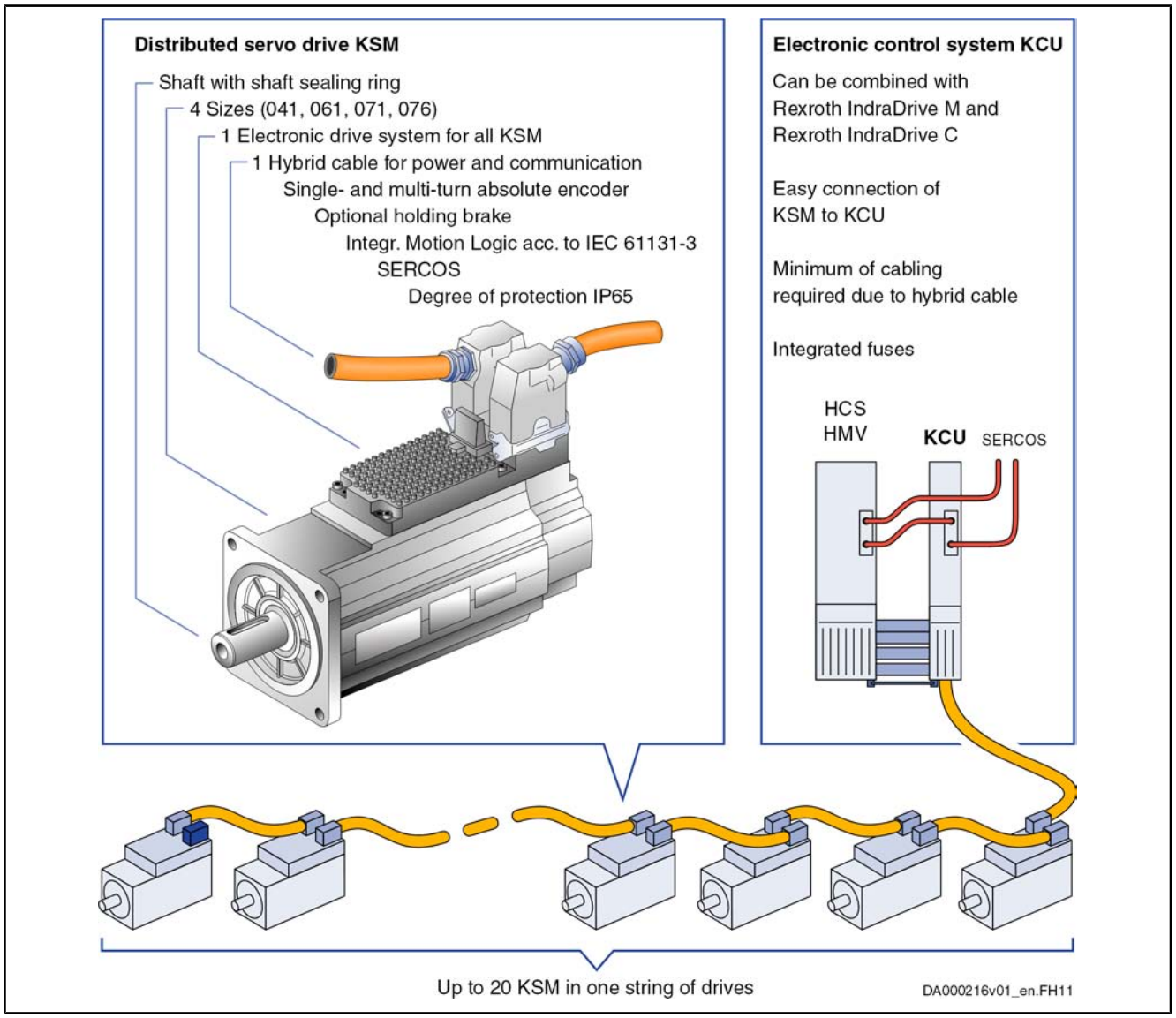

Fig. 1-1: Rexroth IndraDrive Mi With KSM – Features

Courtesy of CMA/Flodyne/Hydradyne ▪ Motion Control ▪ Hydraulic ▪ Pneumatic ▪ Electrical ▪ Mechanical ▪ (800) 426-5480 ▪ www.cmafh.com

Courtesy of CMA/Flodyne/Hydradyne ▪ Motion Control ▪ Hydraulic ▪ Pneumatic ▪ Electrical ▪ Mechanical ▪ (800) 426-5480 ▪ www.cmafh.com

Distributed Drive Controller KMS

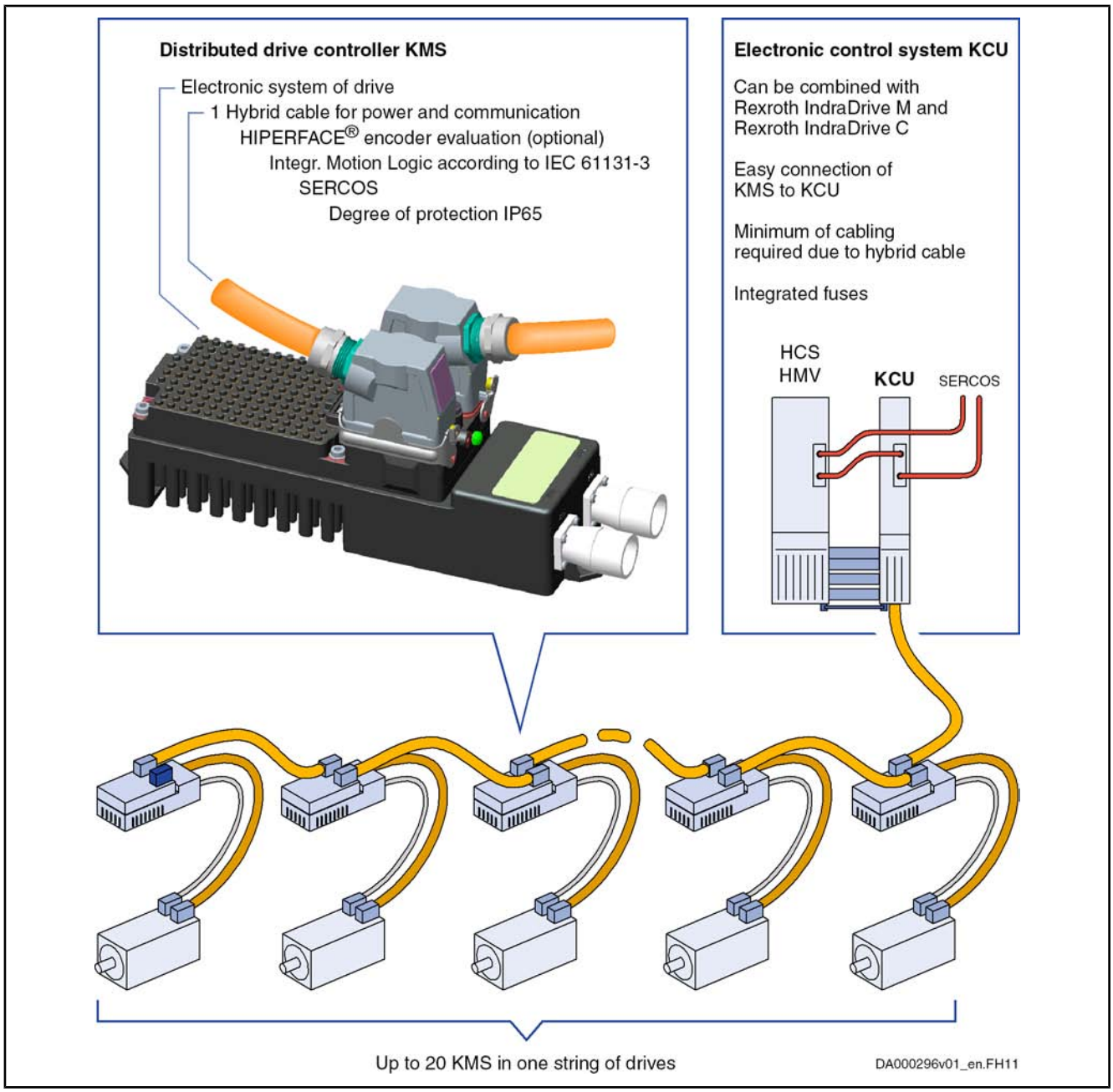

Fig. 1-2: Rexroth IndraDrive Mi With KMS – Features

Combination of KSM and KMS

In a Rexroth IndraDrive Mi drive system, it is possible to combine distributed servo motors KSM and distributed drive controllers KMS.

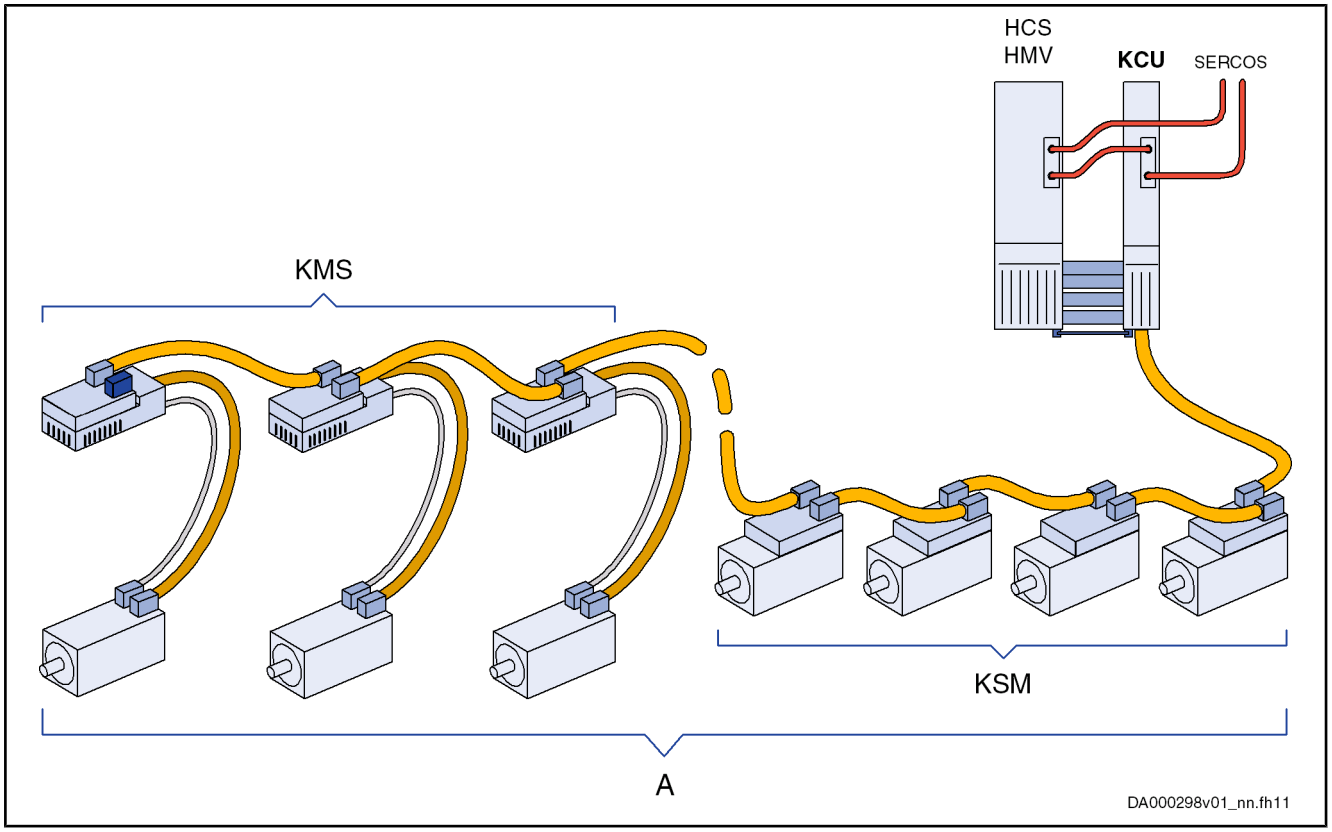

A Up to 20 KSM/KMS in one string of drives
Fig. 1-3: Rexroth IndraDrive Mi With KSM and KMS

Differences to Rexroth IndraDrive and Rexroth IndraDyn

In the following points, the system solution Rexroth IndraDrive Mi differs from a standard solution with Rexroth IndraDrive and Rexroth IndraDyn:

- KSM: Limited performance levels and exclusively available on the basis of Rexroth IndraDyn S, i.e. no linear and kit motors
- KMS: Limited performance levels; can exclusively be used to operate Rexroth IndraDyn S motors
- Exclusively SERCOS interface as master communication

1.2 Drive System Rexroth IndraDrive Mi

1.2.1 Components

General Information

A Rexroth IndraDrive Mi drive system consists of the following components:

Courtesy of CMA/Flodyne/Hydradyne ▪ Motion Control ▪ Hydraulic ▪ Pneumatic ▪ Electrical ▪ Mechanical ▪ (800) 426-5480 ▪ www.cmafh.com

Courtesy of CMA/Flodyne/Hydradyne ▪ Motion Control ▪ Hydraulic ▪ Pneumatic ▪ Electrical ▪ Mechanical ▪ (800) 426-5480 ▪ www.cmafh.com

System Presentation

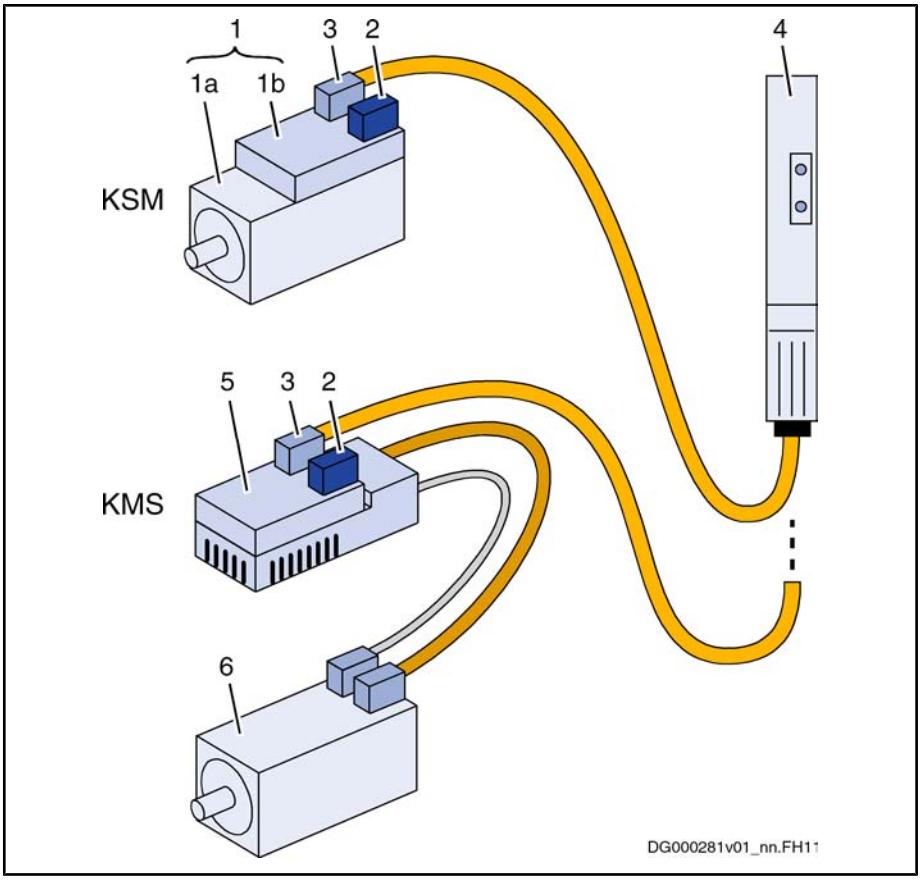

1	Distributed servo drive KSM; 1a: Basic motor; 1b: Electronic system of drive (power section and control section)
2	Terminal connector RHS (to close the SERCOS ring)
3	Hybrid cable RKH (for power and communication)
4	Electronic control system KCU (power supply and signal conversion)
5	Distributed drive controller KMS
6	Motor

Fig.1-4: Components

Distributed Servo Drive KSM

The distributed servo drive KSM consists of 2 parts:

- Servo motor (on the basis of Rexroth IndraDyn S)
- Electronic system of drive, consisting of control section and power section

Distributed Drive Controller KMS

The distributed drive controller KMS consists of a control section and a power section.

Hybrid Cable RKH

The hybrid cable RKH replaces the following individual cables:

- Motor power cable
- Encoder cable
- Control voltage and signal exchange cable
- SERCOS cable

The hybrid cable is supplied in ready-made form with connectors.

Electronic Control System KCU

The electronic control system KCU

- supplies power to the distributed servo drives KSM and distributed drive controllers KMS (from the DC bus connection to an HMV supply unit or HCS converter)
- with integrated fuses protects the hybrid cable RKH against electric overload

- allows communication between the higher-level control unit and the distributed servo drives KSM

Lines

See section "Type Code"

- Electronic Control System KCU
- Distributed Servo Drive KSM
- Distributed Drive Controller KMS

1.2.2 Firmware

Firmware required to operate a Rexroth IndraDrive Mi drive system:

Product Line		Size, length		Other features	Supported as of firmware version
KSM01.2B	-	041C	-	-	MPB-04V20
	-	061C	-		
	-	071C	-		
	-	076C	-		

Fig. 1-5: Required Firmware Versions for Distributed Servo Drives

Product Line	Features	Supported as of firmware version
KMS01	B-A018-P-D7-SE-ENH-NN-NN	MPB-06VRS
	B-A018-P-D7-SE-NNN-NN-NN	

Fig. 1-6: Required Firmware Version for Distributed Drive Controllers

1.2.3 System Structure

The supply unit which is used significantly defines the system structure.

Possible supply units:

- Rexroth IndraDrive **supply unit HMV01.1E/R** or **HMV02.1R**
- Rexroth IndraDrive **converter HCS02.1** or **HCS03.1** (makes sense if another axis is required)

☞ The figure below shows a Rexroth IndraDrive Mi drive system which contains distributed servo drives KSM. This system structure also applies to Rexroth IndraDrive Mi drive systems with distributed drive controllers KMS.

Courtesy of CMA/Flodyne/Hydradyne ▪ Motion Control ▪ Hydraulic ▪ Pneumatic ▪ Electrical ▪ Mechanical ▪ (800) 426-5480 ▪ www.cmafh.com

Courtesy of CMA/Flodyne/Hydradyne ▪ Motion Control ▪ Hydraulic ▪ Pneumatic ▪ Electrical ▪ Mechanical ▪ (800) 426-5480 ▪ www.cmafh.com

System Presentation

Drive System Rexroth IndraDrive Mi With HMV01 Supply Unit:

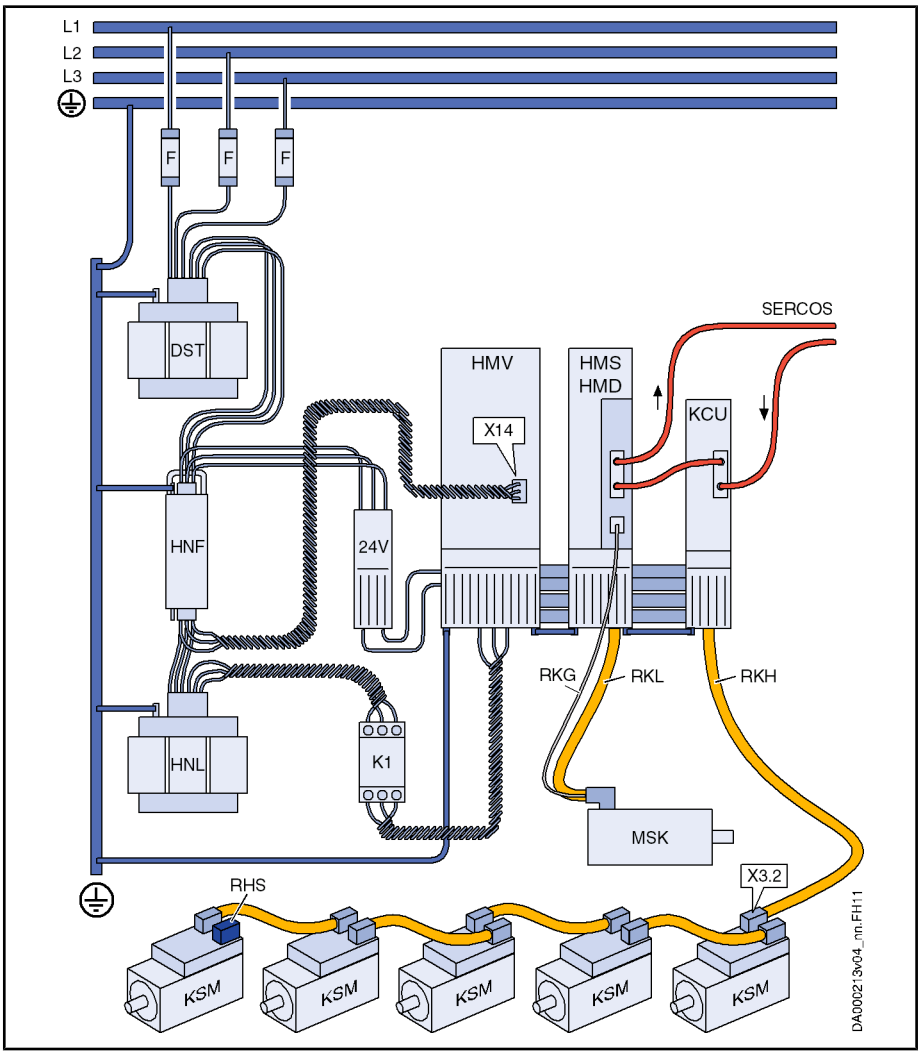

24V	24V supply
DST	Transformer (optional)
F	Fuses
HMD, HMS	Inverter (optional)
HMV01	Supply unit
HNF	Mains filter
HNL	Mains choke
K1	Mains contactor (only for supply units without integrated mains contactor, e.g. HMV01.1R-W0120)
KCU	Electronic control system
KSM	Distributed servo drive
MSK	Servo motor (optional)
RHS	Terminal connector
RKG	Encoder cable (optional)
RKH	Hybrid cable
RKL	Motor cable (optional)
X14	Mains synchronization (only with regenerative HMVs)
X3.2	Connection of hybrid cable RKH at first KSM

Fig. 1-7: Drive System Rexroth IndraDrive Mi With HMV01

For other figures showing Rexroth IndraDrive Mi drive systems, see index entry "Drive system → Connection diagram".

1.2.4 Overview of Functions

Firmware Functions (Functional Packages)

☞ For the available firmware functions, see chapter "Functional Packages" in the Functional Description of the firmware used.

Hardware-related functional restrictions as compared to drive controllers with CSB and CSH control sections:

- No safety technology
- No analog inputs or outputs
- No digital and analog I/O extensions
- No additional encoder evaluations or encoder emulations

1.3 Type Code

1.3.1 Introduction

The type code is the basis of each purchase order of a Rexroth product.

It unequivocally describes all variants which can be supplied:

- Distributed servo drive **KSM**
- Distributed drive controller **KMS**
- Electronic control system **KCU**
- Firmware **MPB** (observe the allowed firmware versions; see index entry "Firmware → KSM or KMS")

Notes on Product Selection

For product selection and purchase order, take the following aspects into account:

- Observe detailed information and instructions in the chapters "Technical Data of the Components" and "Notes on Project Planning"
- Before placing a purchase order, have our sales representative check whether individual options are available

☞ The figure illustrates the basic structure of the type code. Our sales representative will help you with the current status of available versions.

Courtesy of CMA/Flodyne/Hydradyne ▪ Motion Control ▪ Hydraulic ▪ Pneumatic ▪ Electrical ▪ Mechanical ▪ (800) 426-5480 ▪ www.cmafh.com

Courtesy of CMA/Flodyne/Hydradyne ▪ Motion Control ▪ Hydraulic ▪ Pneumatic ▪ Electrical ▪ Mechanical ▪ (800) 426-5480 ▪ www.cmafh.com

System Presentation

1.3.2 Distributed Servo Drive KSM

Type Code

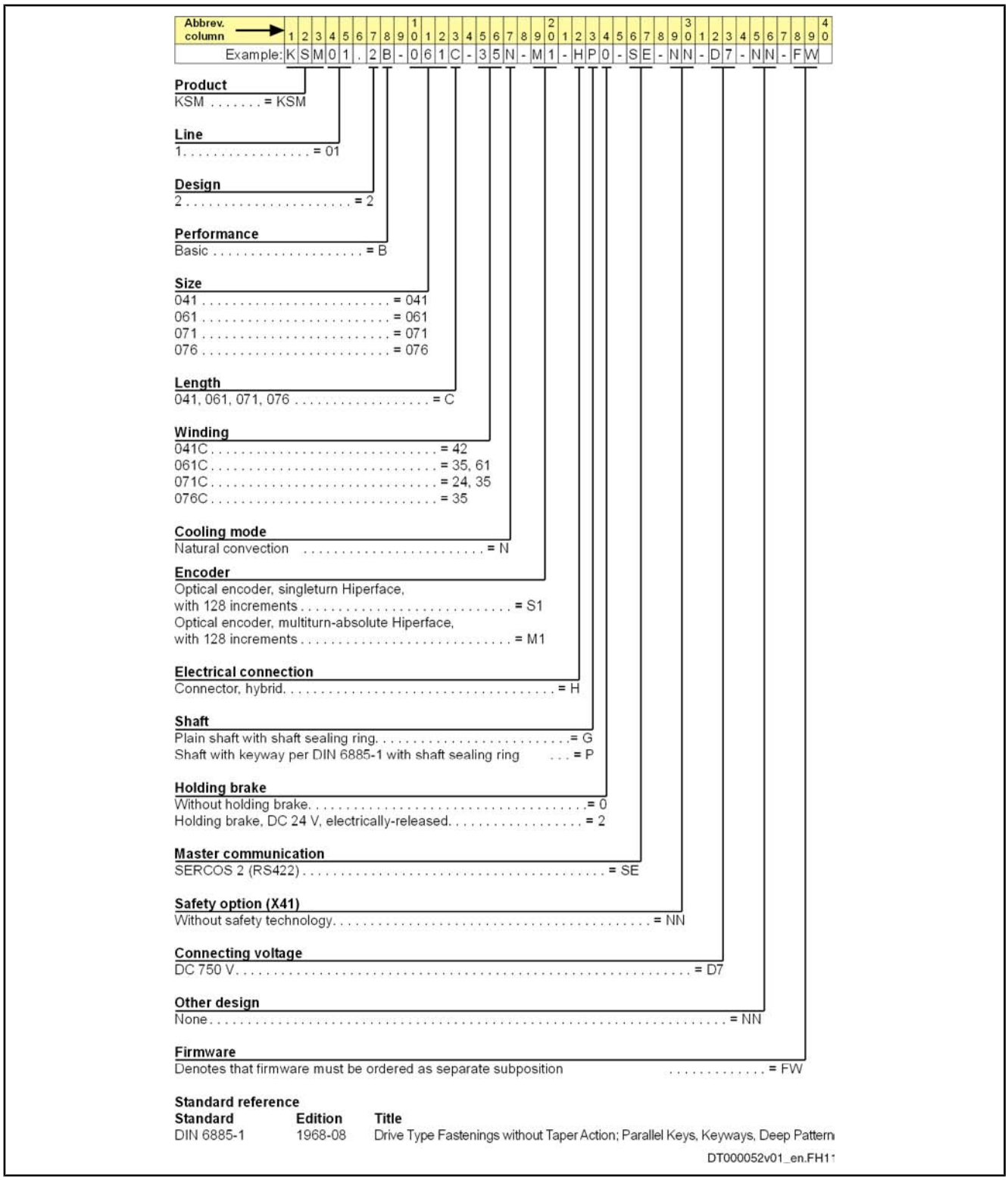

Fig. 1-8: Type Code KSM

Courtesy of CMA/Flodyne/Hydradyne ▪ Motion Control ▪ Hydraulic ▪ Pneumatic ▪ Electrical ▪ Mechanical ▪ (800) 426-5480 ▪ www.cmafh.com

Explanation of the Type Code

The type code has the following basic structure:

- **Product**

Abbrev. column 1 2 3 4 5 6 7 8

KSM Designation of the line

- **Size**

Abbrev. column 10 11 12

The size defines important mechanical dimensions. In addition, the rotor inertia is distinguished in column 11.

Abbrev. column <12> : 1 Rotor inertia reduced

6 Rotor inertia normal

- **Length**

Abbrev. column 13

Within one line, increasing length is graded by code letters in alphabetic order.

- **Winding**

Abbrev. column 15 16

The two-digit sequence of numerals, multiplied by 100, makes the rated speed applying to the corresponding winding variant.

- **Cooling mode**

Abbrev. column 17

N: Natural convection

- **Motor encoder**

Abbrev. column 19 20

Distributed servo drives KSM have been equipped with an integrated encoder system. To control the motor speed or position the motor, the servo drive needs information on the current motor position.

Option	Encoder type
S1	Optical encoder single-turn, position detection absolute over 1 motor revolution with a resolution of 128 × 2^{13} pieces of information per revolution
M1	Optical encoder multi-turn, position detection absolute over 4096 motor revolutions with a resolution of 128 × 2^{13} pieces of information per revolution

Fig. 1-9: Motor Encoder

- **Connection system**

Abbrev. column 22

Connection for hybrid cable RKH

- **Shaft**

Abbrev. column 23

To connect the machine elements to be driven to the motor shafts, there are the following options.

Option	Design	Detail
G	Plain shaft	With centering hole on the end face with thread "DS" according to DIN 332, part 2, edition 05.83
P	Shaft with keyway [1)]	
1) Keyway according to DIN 6885, sheet 1, edition 08.68 (for details see dimensional drawing!)		

Fig. 1-10: KSM Output Shafts

☞ Distributed servo drives KSM are balanced with the **complete** key. The corresponding key is not part of the scope of supply.

- **Holding brake**

Courtesy of CMA/Flodyne/Hydradyne ▪ Motion Control ▪ Hydraulic ▪ Pneumatic ▪ Electrical ▪ Mechanical ▪ (800) 426-5480 ▪ www.cmafh.com

Abbrev. column 24

Distributed servo drives KSM can be optionally supplied with electrically released holding brakes.

Option	Holding brakes	
0	Without holding brake	
2	With holding brake	For holding torques, see individual data sheets.

Fig. 1-11: KSM Holding Brakes

☞ The holding brake is not suited for personal protection or as a service brake! Observe the installation and safety instructions for the holding brakes!

- **Master communication**

Abbrev. column 26 27

SE: SERCOS (RS422)

- **Safety option (X41)**

Abbrev. column 29 30

NN: None

- **Connecting voltage**

Abbrev. column 32 33

D7: DC 750 V

- **Other design**

Abbrev. column 35 36

NN: None

- **Firmware**

Abbrev. column 38 39

FW: Firmware must be ordered as separate subposition

- **Standard reference**

The item "Standard reference" refers to standards cited in the type code (e.g. DIN, EN, ISO) or INN… reference factory standards. The type code lists the edition valid at the point of time the type code is issued.

1.3.3 Distributed Drive Controller KMS

Type Code

Abbrev. column →	1	2	3	4	5	6	7	8	9	10	11	12	13	14	15	16	17	18	19	20	21	22	23	24	25	26	27	28	29	30	31	32	33	34	35	36	37	38	39
Example:	K	M	S	0	1	.	2	B	-	A	0	1	8	-	P	-	D	7	-	S	E	-	E	N	H	-	N	N	-	N	N	-	F	W					

Product
KMS . . . . . = KMS

Line
01. . . . . = 01

Design
2 . . . . . = 2

Performance
Basic . . . . . = B

Cooling mode
Natural convection
(heat sink is out side). . . . . = A

Maximum current
E.g., 18 A . . . . . = 018

Protection mode
IP 65. . . . . = P

DC-bus nominal voltage
DC 750 V. . . . . = D7

Master communication
SERCOS interface (RS422) . . . . . = SE

Encoder interface
Encoder Hiperface® . . . . . = ENH
None (without holding brake control). . . . . = NNN

Safety option
None . . . . . = NN

Other design
None . . . . . = NN

Firmware
Denotes that firmware must be ordered as separate subposition. . . . . = FW

Standard reference

Standard	Edition	Title
DIN EN 60529	2000-09	Degree of Protection (IP-Code)

DT000062v01_en.FH11

Fig. 1-12: Type Code KMS

Courtesy of CMA/Flodyne/Hydradyne ▪ Motion Control ▪ Hydraulic ▪ Pneumatic ▪ Electrical ▪ Mechanical ▪ (800) 426-5480 ▪ www.cmafh.com

Courtesy of CMA/Flodyne/Hydradyne ▪ Motion Control ▪ Hydraulic ▪ Pneumatic ▪ Electrical ▪ Mechanical ▪ (800) 426-5480 ▪ www.cmafh.com

System Presentation

1.3.4 Electronic Control System KCU

Type Code

Abbrev. column →	1	2	3	4	5	6	7	8	9	10	11	12	13	14	15	16	17	18	19	20	21	22	23	24	25	26	27	28	29	30
Example:	K	C	U	0	1	.	2	N	-	S	E	-	S	E	*	-	0	2	5	-	N	N	-	S	-	N	N	-	N	W

Product
KCU . . . . . = KCU

Line
1 . . . . . = 01

Design
2 . . . . . = 2

Configuration option
Fixed configuration. . . . . .= N

Master communication (Input)
SERCOS 2 (LWL) . . . . . = SE

Master communication (Output)
SERCOS 2 (RS422) . . . . . = SE*

DC Protection
Nominal current: 25 A. . . . . = 025

Safety option
Without safety option. . . . . = NN

Control panel
Standard control panel . . . . . = S

Other design
None . . . . . = NN

Firmware
Without Firmware . . . . . = NW

DT000053v01_en.FH11

Fig. 1-13: Type Code KCU

1.3.5 Firmware

Type code: See Functional Description of firmware

1.4 About This Documentation

1.4.1 Document Structure

Chapter	Title	Contents
1	System Presentation	General information
2	Important Directions for Use	Safety
3	Safety Instructions	
4	General Specification of the Components	Product description (for those doing project planning)
5	Technical Data of the Components	
6	Connection Points	
7	Notes on Project Planning	
8	Identification	Practical application (for operators and maintenance staff)
9	Mounting and Installation	
10	Accessories	
11	Commissioning, Operation, Diagnoses, Service and Maintenance	
12	Environmental Protection and Disposal	
13	Service and Support	
14	Appendix	

Fig. 1-14: Document Structure

1.4.2 Editions

Edition	Release date	Notes
DOK-INDRV*-KCU+KSM****-PR01-EN-P	2007/04	-
DOK-INDRV*-KCU+KSM****-PR02-EN-P	2008/02	-
DOK-INDRV*-KCU+KSM****-PR03-EN-P	2008/03	-
DOK-INDRV*-KCU+KSM****-PR04-EN-P	2010/03	*Changes* • Distributed drive controller KMS included • Technical data updated • Notes on project planning expanded • Interface cable RKS0010 included

Fig. 1-15: Editions

1.4.3 Reference Documentations

Drive Systems, System Components

Title Rexroth IndraDrive …	Kind of documentation	Document typecode[1)] DOK-INDRV*-…	Part number R911…
Drive Systems With HMV01/02 HMS01/02, HMD01, HCS02/03	Project Planning Manual	SYSTEM*****-PRxx-EN-P	309636
Mi Drive Systems	Project Planning Manual	KCU+KSM****-PRxx-EN-P	320924

Courtesy of CMA/Flodyne/Hydradyne ▪ Motion Control ▪ Hydraulic ▪ Pneumatic ▪ Electrical ▪ Mechanical ▪ (800) 426-5480 ▪ www.cmafh.com

Courtesy of CMA/Flodyne/Hydradyne ▪ Motion Control ▪ Hydraulic ▪ Pneumatic ▪ Electrical ▪ Mechanical ▪ (800) 426-5480 ▪ www.cmafh.com

System Presentation

Title Rexroth IndraDrive …	Kind of documentation	Document typecode[1)] DOK-INDRV*-…	Part number R911…
Supply Units, Power Sections HMV, HMS, HMD, HCS02, HCS03	Project Planning Manual	HMV-S-D+HCS-PRxx-EN-P	318790
Drive controllers Control Sections CSB01, CSH01, CDB01	Project Planning Manual	CSH********-PRxx-EN-P	295012
Additional Components and Accessories	Project Planning Manual	ADDCOMP****-PRxx-EN-P	306140
C Drive Controllers HCS02.1, HCS03.1	Operating Instructions	FU**********-IBxx-EN-P	314905

1) In the document typecodes, "xx" is a wild card for the current edition of the documentation (example: PR01 is the first edition of a Project Planning Manual)

Fig.1-16: Documentations – Overview

Title	Kind of documentation	Document typecode[1)]	Part number R911…
Automation Terminals Of The Rexroth Inline Product Range	Application Manual	DOK-CONTRL-ILSYSINS***-AWxx-EN-P	317021

1) In the document typecodes, "xx" is a wild card for the current edition of the documentation (example: AW01 is the first edition of an Application Manual)

Fig.1-17: Documentations – Overview

Motors

Title Rexroth IndraDyn …	Kind of documentation	Document typecode[1)] DOK-MOTOR*-…	Part number R911…
A Asynchronous Motors MAD / MAF	Project Planning Manual	MAD/MAF****-PRxx-EN-P	295781
H Frameless Synchronous Spindle Motors	Project Planning Manual	MBS-H******-PRxx-EN-P	297895
L Synchronous Linear Motors	Project Planning Manual	MLF********-PRxx-EN-P	293635
S MSK Synchronous Motors	Project Planning Manual	MSK********-PRxx-EN-P	296289
T Synchronous Torque Motors	Project Planning Manual	MBT********-PRxx-EN-P	298798

1) In the document typecodes, "xx" is a wild card for the current edition of the documentation (example: PR01 is the first edition of a Project Planning Manual)

Fig.1-18: Documentations – Overview

Cables

Title	Kind of documentation	Document typecode[1)] DOK-…	Part number R911…
Rexroth Connection Cables	Selection Data	CONNEC-CABLE*STAND-AUxx-EN-P	282688

1) In the document typecodes, "xx" is a wild card for the current edition of the documentation (example: AU03 is the third edition of the documentation "Selection Data")

Fig. 1-19: Documentations – Overview

Firmware

Title Rexroth IndraDrive …	Kind of documentation	Document typecode[1)] DOK-INDRV*-…	Part number R911…
Firmware for Drive Controllers MPH-07, MPB-07, MPD-07, MPC-07	Functional Description	MP*-07VRS**-FKxx-EN-P	328670
Firmware for Drive Controllers MPH-06, MPB-06, MPD-06, MPC-06	Functional Description	MP*-06VRS**-FKxx-EN-P	326766
Firmware for Drive Controllers MPH-05, MPB-05, MPD-05	Functional Description	MP*-05VRS**-FKxx-EN-P	320182
Firmware for Drive Controllers MPH-04, MPB-04, MPD-04	Functional Description	MP*-04VRS**-FKxx-EN-P	315485
Firmware for Drive Controllers MPH-03, MPB-03, MPD-03	Functional Description	MP*-03VRS**-FKxx-EN-P	308329
Firmware for Drive Controllers MPH-02, MPB-02, MPD-02	Functional Description	MP*-02VRS**-FKxx-EN-P	299223
Drive controllers MPx-02 to MPx-07	Parameter Description	GEN-**VRS**-PAxx-EN-P	297317
MPx-02 to MPx-07 and HMV	Troubleshooting Guide	GEN-**VRS**-WAxx-EN-P	297319
Integrated Safety Technology	Functional and Application Description	SI*-**VRS**-FKxx-EN-P	297838
Integrated Safety Technology According to IEC61508	Functional Description	SI2-**VRS**-FKxx-EN-P	327664
Rexroth IndraMotion MLD	Application Manual	MLD-**VRS**-AWxx-EN-P	306084
Rexroth IndraMotion MLD Library	Library Description	MLD-SYSLIB*-FKxx-EN-P	309224

1) In the document typecodes, "xx" is a wild card for the current edition of the documentation (example: FK02 is the second edition of a Functional Description)

Fig. 1-20: Documentations – Overview

Courtesy of CMA/Flodyne/Hydradyne ▪ Motion Control ▪ Hydraulic ▪ Pneumatic ▪ Electrical ▪ Mechanical ▪ (800) 426-5480 ▪ www.cmafh.com

Courtesy of CMA/Flodyne/Hydradyne ▪ Motion Control ▪ Hydraulic ▪ Pneumatic ▪ Electrical ▪ Mechanical ▪ (800) 426-5480 ▪ www.cmafh.com

System Presentation

Title	Kind of documentation	Document typecode[1)]	Part number R911…
Productivity Agent Extended Diagnostic Functions With Rexroth IndraDrive	Application Manual	DOK-INDRV*-MLD-PAGENT*-AWxx-EN-P	323947

1) In the document typecodes, "xx" is a wild card for the current edition of the documentation (example: AW01 is the first edition of an Application Manual)

Fig. 1-21: Documentations – Overview

1.4.4 Your Feedback

☞ Your experience is important for our improvement processes of products and documentations.

Inform us about mistakes you discovered in this documentation and changes you suggest; we would be grateful for your feedback.

Please send your remarks to:

Address for Your Feedback

Bosch Rexroth AG
Dept. BRC/EDY1
Buergermeister-Dr.-Nebel-Str. 2
97816 Lohr, Germany
E-mail: dokusupport@boschrexroth.de

2 Important Directions for Use

2.1 Appropriate Use

2.1.1 Introduction

Rexroth products represent state-of-the-art developments and manufacturing. They are tested prior to delivery to ensure operating safety and reliability.

⚠ WARNING **Personal injury and property damage caused by incorrect use of the products!**

The products have been designed for use in the industrial environment and may only be used in the appropriate way. If they are not used in the appropriate way, situations resulting in property damage and personal injury can occur.

☞ Rexroth as manufacturer is not liable for any damages resulting from inappropriate use. In such cases, the guarantee and the right to payment of damages resulting from inappropriate use are forfeited. The user alone carries all responsibility of the risks.

Before using Rexroth products, make sure that all the pre-requisites for an appropriate use of the products are satisfied:

- Personnel that in any way, shape or form uses our products must first read and understand the relevant safety instructions and be familiar with appropriate use.
- If the products take the form of hardware, then they must remain in their original state, in other words, no structural changes are permitted. It is not permitted to decompile software products or alter source codes.
- Do not mount damaged or faulty products or use them in operation.
- Make sure that the products have been installed in the manner described in the relevant documentation.

2.1.2 Areas of Use and Application

Drive controllers made by Rexroth are designed to control electrical motors and monitor their operation.

Control and monitoring of the Drive controllers may require additional sensors and actors.

☞ The drive controllers may only be used with the accessories and parts specified in this documentation. If a component has not been specifically named, then it may neither be mounted nor connected. The same applies to cables and lines.

Operation is only permitted in the specified configurations and combinations of components using the software and firmware as specified in the relevant Functional Descriptions.

Drive controllers have to be programmed before commissioning, making it possible for the motor to execute the specific functions of an application.

Drive controllers of the Rexroth IndraDrive Mi line have been developed for use in single- and multi-axis drive and control tasks.

To ensure application-specific use of Drive controllers, device types of different drive power and different interfaces are available.

Courtesy of CMA/Flodyne/Hydradyne ▪ Motion Control ▪ Hydraulic ▪ Pneumatic ▪ Electrical ▪ Mechanical ▪ (800) 426-5480 ▪ www.cmafh.com

Typical applications include, for example:

- Handling and mounting systems,
- Packaging and food machines,
- Printing and paper processing machines and
- Machine tools.

Drive controllers may only be operated under the assembly and installation conditions described in this documentation, in the specified position of normal use and under the ambient conditions as described (temperature, degree of protection, humidity, EMC, etc.).

2.2 Inappropriate Use

Using the Drive controllers outside of the operating conditions described in this documentation and outside of the indicated technical data and specifications is defined as "inappropriate use".

Drive controllers must not be used, if ...

- they are subject to operating conditions that do not meet the specified ambient conditions. This includes, for example, operation under water, under extreme temperature fluctuations or extremely high maximum temperatures.
- Furthermore, Drive controllers must not be used in applications which have not been expressly authorized by Rexroth. Please carefully follow the specifications outlined in the general Safety Instructions!

☞ Components of the drive system Rexroth IndraDrive Mi are **products of category C3** (with restricted distribution) according to IEC 61800-3. These components are not provided for use in a public low-voltage mains supplying residential areas. If these components are used in such a mains, high-frequency interference is to be expected. This can require additional measures of radio interference suppression.

Courtesy of CMA/Flodyne/Hydradyne ▪ Motion Control ▪ Hydraulic ▪ Pneumatic ▪ Electrical ▪ Mechanical ▪ (800) 426-5480 ▪ www.cmafh.com

3 Safety Instructions for Electric Drives and Controls

3.1 Definitions of Terms

Application Documentation Application documentation comprises the entire documentation used to inform the user of the product about the use and safety-relevant features for configuring, integrating, installing, mounting, commissioning, operating, maintaining, repairing and decommissioning the product. The following terms are also used for this kind of documentation: User Guide, Operation Manual, Commissioning Manual, Instruction Manual, Project Planning Manual, Application Manual, etc.

Component A component is a combination of elements with a specified function, which are part of a piece of equipment, device or system. Components of the electric drive and control system are, for example, supply units, drive controllers, mains choke, mains filter, motors, cables, etc.

Control System A control system comprises several interconnected control components placed on the market as a single functional unit.

Device A device is a finished product with a defined function, intended for users and placed on the market as an individual piece of merchandise.

Electrical Equipment Electrical equipment encompasses all devices used to generate, convert, transmit, distribute or apply electrical energy, such as electric motors, transformers, switching devices, cables, lines, power-consuming devices, circuit board assemblies, plug-in units, control cabinets, etc.

Electric Drive System An electric drive system comprises all components from mains supply to motor shaft; this includes, for example, electric motor(s), motor encoder(s), supply units and drive controllers, as well as auxiliary and additional components, such as mains filter, mains choke and the corresponding lines and cables.

Installation An installation consists of several devices or systems interconnected for a defined purpose and on a defined site which, however, are not intended to be placed on the market as a single functional unit.

Machine A machine is the entirety of interconnected parts or units at least one of which is movable. Thus, a machine consists of the appropriate machine drive elements, as well as control and power circuits, which have been assembled for a specific application. A machine is, for example, intended for processing, treatment, movement or packaging of a material. The term "machine" also covers a combination of machines which are arranged and controlled in such a way that they function as a unified whole.

Manufacturer The manufacturer is an individual or legal entity bearing responsibility for the design and manufacture of a product which is placed on the market in the individual's or legal entity's name. The manufacturer can use finished products, finished parts or finished elements, or contract out work to subcontractors. However, the manufacturer must always have overall control and possess the required authority to take responsibility for the product.

Product Examples of a product: Device, component, part, system, software, firmware, among other things.

Project Planning Manual A project planning manual is part of the application documentation used to support the sizing and planning of systems, machines or installations.

Qualified Persons In terms of this application documentation, qualified persons are those persons who are familiar with the installation, mounting, commissioning and operation of the components of the electric drive and control system, as well as with the hazards this implies, and who possess the qualifications their work requires. To comply with these qualifications, it is necessary, among other things,

Courtesy of CMA/Flodyne/Hydradyne ▪ Motion Control ▪ Hydraulic ▪ Pneumatic ▪ Electrical ▪ Mechanical ▪ (800) 426-5480 ▪ www.cmafh.com

1) to be trained, instructed or authorized to switch electric circuits and devices safely on and off, to ground them and to mark them

2) to be trained or instructed to maintain and use adequate safety equipment

3) to attend a course of instruction in first aid

User A user is a person installing, commissioning or using a product which has been placed on the market.

3.2 General Information

3.2.1 Using the Safety Instructions and Passing Them on to Others

Do not attempt to install and operate the components of the electric drive and control system without first reading all documentation provided with the product. Read and understand these safety instructions and all user documentation prior to working with these components. If you do not have the user documentation for the components, contact your responsible Rexroth sales partner. Ask for these documents to be sent immediately to the person or persons responsible for the safe operation of the components.

If the component is resold, rented and/or passed on to others in any other form, these safety instructions must be delivered with the component in the official language of the user's country.

Improper use of these components, failure to follow the safety instructions in this document or tampering with the product, including disabling of safety devices, could result in property damage, injury, electric shock or even death.

3.2.2 Requirements for Safe Use

Read the following instructions before initial commissioning of the components of the electric drive and control system in order to eliminate the risk of injury and/or property damage. You must follow these safety instructions.

- Rexroth is not liable for damages resulting from failure to observe the safety instructions.
- Read the operating, maintenance and safety instructions in your language before commissioning. If you find that you cannot completely understand the application documentation in the available language, please ask your supplier to clarify.
- Proper and correct transport, storage, mounting and installation, as well as care in operation and maintenance, are prerequisites for optimal and safe operation of the component.
- Only qualified persons may work with components of the electric drive and control system or within its proximity.
- Only use accessories and spare parts approved by Rexroth.
- Follow the safety regulations and requirements of the country in which the components of the electric drive and control system are operated.
- Only use the components of the electric drive and control system in the manner that is defined as appropriate. See chapter "Appropriate Use".
- The ambient and operating conditions given in the available application documentation must be observed.
- Applications for functional safety are only allowed if clearly and explicitly specified in the application documentation "Integrated Safety Technology". If this is not the case, they are excluded. Functional safety is a safety

Courtesy of CMA/Flodyne/Hydradyne ▪ Motion Control ▪ Hydraulic ▪ Pneumatic ▪ Electrical ▪ Mechanical ▪ (800) 426-5480 ▪ www.cmafh.com

Courtesy of CMA/Flodyne/Hydradyne ▪ Motion Control ▪ Hydraulic ▪ Pneumatic ▪ Electrical ▪ Mechanical ▪ (800) 426-5480 ▪ www.cmafh.com

concept in which measures of risk reduction for personal safety depend on electrical, electronic or programmable control systems.

- The information given in the application documentation with regard to the use of the delivered components contains only examples of applications and suggestions.

  The machine and installation manufacturers must

  – make sure that the delivered components are suited for their individual application and check the information given in this application documentation with regard to the use of the components,

  – make sure that their individual application complies with the applicable safety regulations and standards and carry out the required measures, modifications and complements.
- Commissioning of the delivered components is only allowed once it is sure that the machine or installation in which the components are installed complies with the national regulations, safety specifications and standards of the application.
- Operation is only allowed if the national EMC regulations for the application are met.
- The instructions for installation in accordance with EMC requirements can be found in the section on EMC in the respective application documentation.

  The machine or installation manufacturer is responsible for compliance with the limit values as prescribed in the national regulations.
- The technical data, connection and installation conditions of the components are specified in the respective application documentations and must be followed at all times.

National regulations which the user must take into account

- European countries: In accordance with European EN standards
- United States of America (USA):
  – National Electrical Code (NEC)
  – National Electrical Manufacturers Association (NEMA), as well as local engineering regulations
  – Regulations of the National Fire Protection Association (NFPA)
- Canada: Canadian Standards Association (CSA)
- Other countries:
  – International Organization for Standardization (ISO)
  – International Electrotechnical Commission (IEC)

3.2.3 Hazards by Improper Use

- High electrical voltage and high working current! Danger to life or serious injury by electric shock!
- High electrical voltage by incorrect connection! Danger to life or injury by electric shock!
- Dangerous movements! Danger to life, serious injury or property damage by unintended motor movements!
- Health hazard for persons with heart pacemakers, metal implants and hearing aids in proximity to electric drive systems!
- Risk of burns by hot housing surfaces!

Courtesy of CMA/Flodyne/Hydradyne ▪ Motion Control ▪ Hydraulic ▪ Pneumatic ▪ Electrical ▪ Mechanical ▪ (800) 426-5480 ▪ www.cmafh.com

- Risk of injury by improper handling! Injury by crushing, shearing, cutting, hitting!
- Risk of injury by improper handling of batteries!
- Risk of injury by improper handling of pressurized lines!

3.3 Instructions with Regard to Specific Dangers

3.3.1 Protection Against Contact with Electrical Parts and Housings

☞ This section concerns components of the electric drive and control system with voltages of **more than 50 volts**.

Contact with parts conducting voltages above 50 volts can cause personal danger and electric shock. When operating components of the electric drive and control system, it is unavoidable that some parts of these components conduct dangerous voltage.

High electrical voltage! Danger to life, risk of injury by electric shock or serious injury!

- Only qualified persons are allowed to operate, maintain and/or repair the components of the electric drive and control system.
- Follow the general installation and safety regulations when working on power installations.
- Before switching on, the equipment grounding conductor must have been permanently connected to all electric components in accordance with the connection diagram.
- Even for brief measurements or tests, operation is only allowed if the equipment grounding conductor has been permanently connected to the points of the components provided for this purpose.
- Before accessing electrical parts with voltage potentials higher than 50 V, you must disconnect electric components from the mains or from the power supply unit. Secure the electric component from reconnection.
- With electric components, observe the following aspects:

  Always wait **30 minutes** after switching off power to allow live capacitors to discharge before accessing an electric component. Measure the electrical voltage of live parts before beginning to work to make sure that the equipment is safe to touch.
- Install the covers and guards provided for this purpose before switching on.
- Never touch electrical connection points of the components while power is turned on.
- Do not remove or plug in connectors when the component has been powered.
- Under specific conditions, electric drive systems can be operated at mains protected by residual-current-operated circuit-breakers sensitive to universal current (RCDs/RCMs).
- Secure built-in devices from penetrating foreign objects and water, as well as from direct contact, by providing an external housing, for example a control cabinet.

Courtesy of CMA/Flodyne/Hydradyne ▪ Motion Control ▪ Hydraulic ▪ Pneumatic ▪ Electrical ▪ Mechanical ▪ (800) 426-5480 ▪ www.cmafh.com

High housing voltage and high leakage current! Danger to life, risk of injury by electric shock!

- Before switching on and before commissioning, ground or connect the components of the electric drive and control system to the equipment grounding conductor at the grounding points.
- Connect the equipment grounding conductor of the components of the electric drive and control system permanently to the main power supply at all times. The leakage current is greater than 3.5 mA.
- Establish an equipment grounding connection with a copper wire of a cross section of at least 10 mm^2 (8 AWG) or additionally run a second equipment grounding conductor of the same cross section as the original equipment grounding conductor.

3.3.2 Protective Extra-Low Voltage as Protection Against Electric Shock

Protective extra-low voltage is used to allow connecting devices with basic insulation to extra-low voltage circuits.

On components of an electric drive and control system provided by Rexroth, all connections and terminals with voltages between 5 and 50 volts are PELV ("Protective Extra-Low Voltage") systems. It is allowed to connect devices equipped with basic insulation (such as programming devices, PCs, notebooks, display units) to these connections.

Danger to life, risk of injury by electric shock! High electrical voltage by incorrect connection!

If extra-low voltage circuits of devices containing voltages and circuits of more than 50 volts (e.g., the mains connection) are connected to Rexroth products, the connected extra-low voltage circuits must comply with the requirements for PELV ("Protective Extra-Low Voltage").

3.3.3 Protection Against Dangerous Movements

Dangerous movements can be caused by faulty control of connected motors. Some common examples are:

- Improper or wrong wiring or cable connection
- Operator errors
- Wrong input of parameters before commissioning
- Malfunction of sensors and encoders
- Defective components
- Software or firmware errors

These errors can occur immediately after equipment is switched on or even after an unspecified time of trouble-free operation.

The monitoring functions in the components of the electric drive and control system will normally be sufficient to avoid malfunction in the connected drives. Regarding personal safety, especially the danger of injury and/or property damage, this alone cannot be relied upon to ensure complete safety. Until the integrated monitoring functions become effective, it must be assumed in any case that faulty drive movements will occur. The extent of faulty drive movements depends upon the type of control and the state of operation.

Courtesy of CMA/Flodyne/Hydradyne ▪ Motion Control ▪ Hydraulic ▪ Pneumatic ▪ Electrical ▪ Mechanical ▪ (800) 426-5480 ▪ www.cmafh.com

Dangerous movements! Danger to life, risk of injury, serious injury or property damage!

A **risk assessment** must be prepared for the installation or machine, with its specific conditions, in which the components of the electric drive and control system are installed.

As a result of the risk assessment, the user must provide for monitoring functions and higher-level measures on the installation side for personal safety. The safety regulations applicable to the installation or machine must be taken into consideration. Unintended machine movements or other malfunctions are possible if safety devices are disabled, bypassed or not activated.

To avoid accidents, injury and/or property damage:

- Keep free and clear of the machine's range of motion and moving machine parts. Prevent personnel from accidentally entering the machine's range of motion by using, for example:
  - Safety fences
  - Safety guards
  - Protective coverings
  - Light barriers
- Make sure the safety fences and protective coverings are strong enough to resist maximum possible kinetic energy.
- Mount emergency stopping switches in the immediate reach of the operator. Before commissioning, verify that the emergency stopping equipment works. Do not operate the machine if the emergency stopping switch is not working.
- Prevent unintended start-up. Isolate the drive power connection by means of OFF switches/OFF buttons or use a safe starting lockout.
- Make sure that the drives are brought to safe standstill before accessing or entering the danger zone.
- Additionally secure vertical axes against falling or dropping after switching off the motor power by, for example,
  - mechanically securing the vertical axes,
  - adding an external braking/arrester/clamping mechanism or
  - ensuring sufficient counterbalancing of the vertical axes.
- The standard equipment **motor holding brake** or an external holding brake controlled by the drive controller is **not sufficient to guarantee personal safety**!
- Disconnect electrical power to the components of the electric drive and control system using the master switch and secure them from reconnection ("lock out") for:
  - Maintenance and repair work
  - Cleaning of equipment
  - Long periods of discontinued equipment use
- Prevent the operation of high-frequency, remote control and radio equipment near components of the electric drive and control system and their supply leads. If the use of these devices cannot be avoided, check the machine or installation, at initial commissioning of the electric drive and control system, for possible malfunctions when operating such high-frequency, remote control and radio equipment in its possible positions of normal use. It might possibly be necessary to perform a special electromagnetic compatibility (EMC) test.

Courtesy of CMA/Flodyne/Hydradyne ▪ Motion Control ▪ Hydraulic ▪ Pneumatic ▪ Electrical ▪ Mechanical ▪ (800) 426-5480 ▪ www.cmafh.com

3.3.4 Protection Against Magnetic and Electromagnetic Fields During Operation and Mounting

Magnetic and electromagnetic fields generated by current-carrying conductors or permanent magnets of electric motors represent a serious danger to persons with heart pacemakers, metal implants and hearing aids.

Health hazard for persons with heart pacemakers, metal implants and hearing aids in proximity to electric components!

- Persons with heart pacemakers and metal implants are not allowed to enter the following areas:
  - Areas in which components of the electric drive and control systems are mounted, commissioned and operated.
  - Areas in which parts of motors with permanent magnets are stored, repaired or mounted.
- If it is necessary for somebody with a heart pacemaker to enter such an area, a doctor must be consulted prior to doing so. The noise immunity of implanted heart pacemakers differs so greatly that no general rules can be given.
- Those with metal implants or metal pieces, as well as with hearing aids, must consult a doctor before they enter the areas described above.

3.3.5 Protection Against Contact With Hot Parts

Hot surfaces of components of the electric drive and control system. Risk of burns!

- Do not touch hot surfaces of, for example, braking resistors, heat sinks, supply units and drive controllers, motors, windings and laminated cores!
- According to the operating conditions, temperatures of the surfaces can be **higher than 60 °C** (140 °F) during or after operation.
- Before touching motors after having switched them off, let them cool down for a sufficient period of time. Cooling down can require **up to 140 minutes**! The time required for cooling down is approximately five times the thermal time constant specified in the technical data.
- After switching chokes, supply units and drive controllers off, wait **15 minutes** to allow them to cool down before touching them.
- Wear safety gloves or do not work at hot surfaces.
- For certain applications, and in accordance with the respective safety regulations, the manufacturer of the machine or installation must take measures to avoid injuries caused by burns in the final application. These measures can be, for example: Warnings at the machine or installation, guards (shieldings or barriers) or safety instructions in the application documentation.

3.3.6 Protection During Handling and Mounting

Risk of injury by improper handling! Injury by crushing, shearing, cutting, hitting!

- Observe the relevant statutory regulations of accident prevention.
- Use suitable equipment for mounting and transport.
- Avoid jamming and crushing by appropriate measures.

- Always use suitable tools. Use special tools if specified.
- Use lifting equipment and tools in the correct manner.
- Use suitable protective equipment (hard hat, safety goggles, safety shoes, safety gloves, for example).
- Do not stand under hanging loads.
- Immediately clean up any spilled liquids from the floor due to the risk of slipping.

3.3.7 Battery Safety

Batteries consist of active chemicals in a solid housing. Therefore, improper handling can cause injury or property damage.

Risk of injury by improper handling!

- Do not attempt to reactivate low batteries by heating or other methods (risk of explosion and cauterization).
- Do not attempt to recharge the batteries as this may cause leakage or explosion.
- Do not throw batteries into open flames.
- Do not dismantle batteries.
- When replacing the battery/batteries, do not damage the electrical parts installed in the devices.
- Only use the battery types specified for the product.

☞ Environmental protection and disposal! The batteries contained in the product are considered dangerous goods during land, air, and sea transport (risk of explosion) in the sense of the legal regulations. Dispose of used batteries separately from other waste. Observe the national regulations of your country.

3.3.8 Protection Against Pressurized Systems

According to the information given in the Project Planning Manuals, motors and components cooled with liquids and compressed air can be partially supplied with externally fed, pressurized media, such as compressed air, hydraulics oil, cooling liquids and cooling lubricants. Improper handling of the connected supply systems, supply lines or connections can cause injuries or property damage.

Risk of injury by improper handling of pressurized lines!

- Do not attempt to disconnect, open or cut pressurized lines (risk of explosion).
- Observe the respective manufacturer's operating instructions.
- Before dismounting lines, relieve pressure and empty medium.
- Use suitable protective equipment (safety goggles, safety shoes, safety gloves, for example).
- Immediately clean up any spilled liquids from the floor due to the risk of slipping.

Courtesy of CMA/Flodyne/Hydradyne ▪ Motion Control ▪ Hydraulic ▪ Pneumatic ▪ Electrical ▪ Mechanical ▪ (800) 426-5480 ▪ www.cmafh.com

☞ Environmental protection and disposal! The agents (e.g., fluids) used to operate the product might not be environmentally friendly. Dispose of agents harmful to the environment separately from other waste. Observe the national regulations of your country.

3.4 Explanation of Signal Words and the Safety Alert Symbol

The Safety Instructions in the available application documentation contain specific signal words (DANGER, WARNING, CAUTION or NOTICE) and, where required, a safety alert symbol (in accordance with ANSI Z535.6-2006).

The signal word is meant to draw the reader's attention to the safety instruction and identifies the hazard severity.

The safety alert symbol (a triangle with an exclamation point), which precedes the signal words DANGER, WARNING and CAUTION, is used to alert the reader to personal injury hazards.

⚠ DANGER

In case of non-compliance with this safety instruction, death or serious injury **will** occur.

⚠ WARNING

In case of non-compliance with this safety instruction, death or serious injury **could** occur.

⚠ CAUTION

In case of non-compliance with this safety instruction, minor or moderate injury could occur.

NOTICE

In case of non-compliance with this safety instruction, property damage could occur.

Courtesy of CMA/Flodyne/Hydradyne ▪ Motion Control ▪ Hydraulic ▪ Pneumatic ▪ Electrical ▪ Mechanical ▪ (800) 426-5480 ▪ www.cmafh.com

Courtesy of CMA/Flodyne/Hydradyne ▪ Motion Control ▪ Hydraulic ▪ Pneumatic ▪ Electrical ▪ Mechanical ▪ (800) 426-5480 ▪ www.cmafh.com

4 General Data and Specifications

4.1 Acceptance Tests and Approvals

Declaration of Conformity

Declarations of conformity confirm that the components comply with the valid EN standards and EC directives. If required, our sales representative can provide you with the declarations of conformity for components.

	Drive controllers, Supply units	Motors
CE conformity regarding Low-Voltage Directive	EN61800-5-1 (IEC 61800-5-1:2007)	EN 60034-1 (IEC 60034-1:2004) EN 60034-5 (IEC 60034-5:2000 + Corrigendum 2001+A1:2006)
CE conformity regarding EMC product standard	EN61800-3 (IEC 61800-3:2004)	

Fig.4-1: CE - Applied Standards

C-UL-US Listing

The components are listed by **UL** (Underwriters Laboratories Inc.®). You can find the evidence of certification on the Internet under http://www.ul.com under "Certifications" by entering the file number or the "Company Name: Rexroth".

c UL us Listed POW. CONV. EQ. 97Y4	• UL standard: UL 508 C • CSA standard: Canadian National Standard C22.2 No. 14-05
	Company Name BOSCH REXROTH ELECTRIC DRIVES & CONTROLS GMBH Category Name: Power Conversion Equipment
	File numbers Rexroth IndraDrive Mi components: • E134201 • E227957 The **control sections** are part of the listed components.

Fig.4-2: C-UL Listing

Courtesy of CMA/Flodyne/Hydradyne ▪ Motion Control ▪ Hydraulic ▪ Pneumatic ▪ Electrical ▪ Mechanical ▪ (800) 426-5480 ▪ www.cmafh.com

Courtesy of CMA/Flodyne/Hydradyne ▪ Motion Control ▪ Hydraulic ▪ Pneumatic ▪ Electrical ▪ Mechanical ▪ (800) 426-5480 ▪ www.cmafh.com

UL ratings

For using the component in the scope of CSA / UL, take the UL ratings of the individual components into account.

In the scope of CSA / UL, it is exclusively the following components which have been approved to supply the components HMS, HMD, KCU, KSM, KMS:

- HMV01.1E
- HMV01.1R
- HMV02.1R
- HCS02.1E
- HCS03.1E

Make sure that the indicated **short circuit current rating SCCR** is not exceeded, e.g. by appropriate fuses in the mains supply of the supply unit.

Wiring material UL

In the scope of CSA / UL, use copper 60/75 °C only; class 1 or equivalent only.

Allowed pollution degree

Comply with the allowed pollution degree of the components (see "Ambient and Operating Conditions").

C-UR-US Listing

The motors are listed by **UL** ("Underwriters Laboratories Inc.®"). You can find the evidence of certification on the Internet under http://www.ul.com under "Certifications" by entering the file number or the "Company Name: Rexroth".

CUR_Zeichen.fh11	• UL standard: UL 1004 • CSA standard: Canadian National Standard C22.2 No. 100
	Company Name BOSCH REXROTH ELECTRIC DRIVES & CONTROLS GMBH Category Name: Motors - Component
	File numbers • MSK motors: E163211 • MSM motors: E223837

Fig.4-3: C-UR Listing

Wiring material UL (ready-made cables by Rexroth)

In the scope of CSA / UL, use copper 60/75 °C only; class 6 or equivalent only.

Allowed pollution degree

Comply with the allowed pollution degree of the components (see "Ambient and Operating Conditions").

Courtesy of CMA/Flodyne/Hydradyne ▪ Motion Control ▪ Hydraulic ▪ Pneumatic ▪ Electrical ▪ Mechanical ▪ (800) 426-5480 ▪ www.cmafh.com

CCC (China Compulsory Certification)

The CCC test symbol comprises a compulsory certification of safety and quality for certain products mentioned in the product catalog "First Catalogue of Products Subject to Compulsory Certification" and in the CNCA document "Application Scope for Compulsory Certification of Products acc. first Catalogue" and put in circulation in China. This compulsory certification has been existing since 2003.

CNCA is the Chinese authority responsible for certification directives. When a product is imported in China, the certification will be checked at the customs by means of entries in a database. For the requirement of certification three criteria are normally relevant:

1. Customs tariff number (HS code) according to CNCA document "Application Scope for Compulsory Certification of Products acc. first Catalogue".
2. Scope of application according to CNCA document "Application Scope for Compulsory Certification of Products acc. first Catalogue".
3. For the IEC product standard used, the corresponding Chinese GB standard must exist.

For the drive components by Rexroth described in this documentation, **certification is not required at present**, thus they are not CCC certified. Negative certifications will not be issued.

4.2 Transport and Storage

4.2.1 Transport of the Components

Ambient and Operating Conditions - Transport

Description	Symbol	Unit	Value	
Temperature range	T_{a_tran}	°C	Supply units and drive controllers: -25 … +70	Motors: -20 … +80
Relative humidity		%	5 … 95	
Absolute humidity		g/m³	1 … 60	
Climatic category (IEC721)			2K3	
Moisture condensation			Not allowed	
Icing			Not allowed	

Fig.4-4: Ambient and Operating Conditions - Transport

4.2.2 Storage of the Components

NOTICE **Damage to the component caused by long storage periods!**

Some components contain electrolytic capacitors which may deteriorate during storage.

When storing the following components for a longer period of time, operate them **once a year for at least 1 hour**:

- Converters and supply units: Operation with mains voltage U_{LN}
- Inverters and DC bus capacitor units: Operation with DC bus voltage U_{DC}

Courtesy of CMA/Flodyne/Hydradyne ▪ Motion Control ▪ Hydraulic ▪ Pneumatic ▪ Electrical ▪ Mechanical ▪ (800) 426-5480 ▪ www.cmafh.com

Ambient and Operating Conditions - Storage

Description	Symbol	Unit	Value	
Temperature range	T_{a_store}	°C	Supply units and drive controllers: -25 … 55	Motors: -20 … +60
Relative humidity		%	5 … 95	
Absolute humidity		g/m³	1 … 29	
Climatic category (IEC721)			1K3	
Moisture condensation			Not allowed	
Icing			Not allowed	

Fig.4-5: Ambient and Operating Conditions - Storage

4.3 Installation Conditions

4.3.1 Ambient and Operating Conditions

The devices and their additional components have been designed for control cabinet mounting.

☞ Check that the ambient conditions, in particular the control cabinet temperature, are complied with by calculating the heat levels in the control cabinet. Afterwards, make the corresponding measurements to find out that the ambient conditions have actually been complied with.

In the technical data of the individual components, the power dissipation is indicated as an important input value for calculating the heat levels.

Distributed servo drives KSM and **distributed drive controllers KMS** are designed for use near to the machines and are not installed in control cabinets.

Ambient and Operating Conditions (HCS, HMV, HMS, HMD, HCQ, HCT, KCU)

Description	Symbol	Unit	Value
Degree of protection (IEC529)			IP20
Use in the scope of CSA / UL			For use in NFPA 79 Applications only.
Temperature during storage			See index entry "Storage → Of the components"
Temperature during transport			See index entry "Transport → Of the components"
Allowed mounting position Definition of mounting positions: See index entry "Mounting position"			G1
Installation altitude	h_{nenn}	m	1000
Ambient temperature range	T_{a_work}	°C	0 … 40

Description	Symbol	Unit	Value
Derating vs. ambient temperature: In the ambient temperature range $T_{a_work_red}$, the performance data are reduced by the factor F_{Ta}: $F_{Ta} = 1 - [(T_a - 40) \times f_{Ta}]$ Example: With an ambient temperature T_a = 50 °C and a capacity utilization factor f_{Ta} = 2 %/K, the rated power is reduced to $P_{DC_cont_red} = P_{DC_cont} \times F_{Ta} =$ $P_{DC_cont} \times (1 - [(50 - 40) \times 0.02]) = P_{DC_cont} \times 0.8$ Operation at ambient temperatures outside of T_{a_work} and $T_{a_work_red}$ is not allowed!	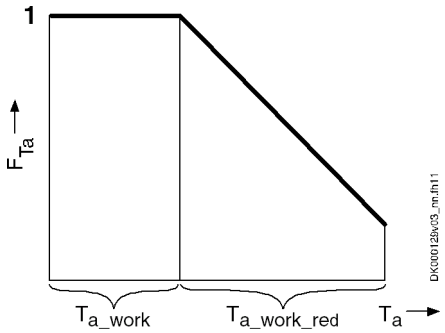		
	$T_{a_work_red}$	°C	40 … 55
	f_{Ta}	%/K	2,0 Exception HMV02.1R-W0015-A-07-NNNN: 2,7
Derating vs. installation altitude: With installation altitudes h > h_{nenn}, the available performance data are reduced by the **factor f**[3) 4)]. With installation altitudes in the range of h_{max_ohne} to h_{max}, an **overvoltage limiter** against transient overvoltage must be installed in the installation. Operation above h_{max} is not allowed!	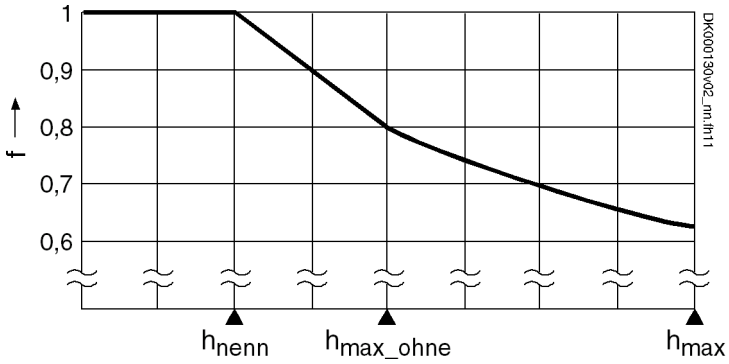		
	h_{max_ohne}	m	2000
	h_{max}	m	4000
Simultaneous derating for ambient temperature **and** installation altitude	Allowed; reduce performance data with the product f × F_{Ta}		
Relative humidity		%	5 … 95
Absolute humidity		g/m^3	1 … 29
Climatic category (IEC721)			3K3
Allowed pollution degree (EN50178)			2
Allowed dust, steam			EN 50178 tab. A.2
Vibration sine: Amplitude (peak-peak) at 10 … 57 Hz[1)]		mm	0,15 ±15%
Vibration sine: Acceleration at 57 … 150 Hz[1)]		g	1 ±15%
Vibration noise (random) frequency[1)]		Hz	20 … 150
Vibration noise (random) spectral acceleration density, amplitude[1)]		g^2/Hz	0.005 ±3 dB
Vibration noise (random) rms value of total acceleration[1)]		g	1

Courtesy of CMA/Flodyne/Hydradyne ▪ Motion Control ▪ Hydraulic ▪ Pneumatic ▪ Electrical ▪ Mechanical ▪ (800) 426-5480 ▪ www.cmafh.com

Courtesy of CMA/Flodyne/Hydradyne ▪ Motion Control ▪ Hydraulic ▪ Pneumatic ▪ Electrical ▪ Mechanical ▪ (800) 426-5480 ▪ www.cmafh.com

General Data and Specifications

Description	Symbol	Unit	Value
Vibration sine: Acceleration at 10 … 2000 Hz 2), axial		g	-
Vibration sine: Acceleration at 10 … 2000 Hz 2), radial		g	-
Overvoltage category			III (according to IEC60664-1)

1) According to EN 60068-2-64
2) According to EN 60068-2-6
3) Reduced performance data for drive controllers: Allowed DC bus continuous power, braking resistor continuous power, continuous current
4) Reduced performance data for motors: Performance, torque S1 and S3

Fig.4-6: Ambient and Operating Conditions (HCS, HMV, HMS, HMD, HCQ, HCT, KCU)

Ambient and Operating Conditions (KSM, KMS)

Description	Symbol	Unit	Value
Degree of protection (IEC529)			IP65
Use in the scope of CSA / UL			For use in NFPA 79 Applications only.
Temperature during storage			See index entry "Storage → Of the components"
Temperature during transport			See index entry "Transport → Of the components"
Allowed mounting position Definition of mounting positions: See index entry "Mounting position"			KSM: IM B5, IM V1, IM V3 KMS: G1, G2, G3, G4, G5
Installation altitude	h_{nenn}	m	1000
Ambient temperature range	T_{a_work}	°C	0 … 40
Derating vs. ambient temperature: In the ambient temperature range $T_{a_work_red}$, the performance data are reduced by the factor F_{Ta}: $F_{Ta} = 1 - [(T_a - 40) \times f_{Ta}]$ Example: With an ambient temperature T_a = 50 °C and a capacity utilization factor f_{Ta} = 3 %/K, the rated power is reduced to $P_{DC_cont_red} = P_{DC_cont} \times F_{Ta} =$ $P_{DC_cont} \times (1 - [(50 - 40) \times 0.03]) = P_{DC_cont} \times 0.7$ Operation at ambient temperatures outside of T_{a_work} and $T_{a_work_red}$ is not allowed!	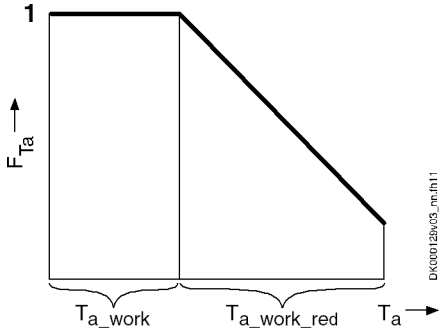		
	$T_{a_work_red}$	°C	40 … 55
	f_{Ta}	%/K	3

Courtesy of CMA/Flodyne/Hydradyne ▪ Motion Control ▪ Hydraulic ▪ Pneumatic ▪ Electrical ▪ Mechanical ▪ (800) 426-5480 ▪ www.cmafh.com

Description	Symbol	Unit	Value
Derating vs. installation altitude: With installation altitudes h > h_{nenn}, the available performance data are reduced by the **factor f**[3) 4)]. With installation altitudes in the range of h_{max_ohne} to h_{max}, an **overvoltage limiter** against transient overvoltage must be installed in the installation. Operation above h_{max} is not allowed!	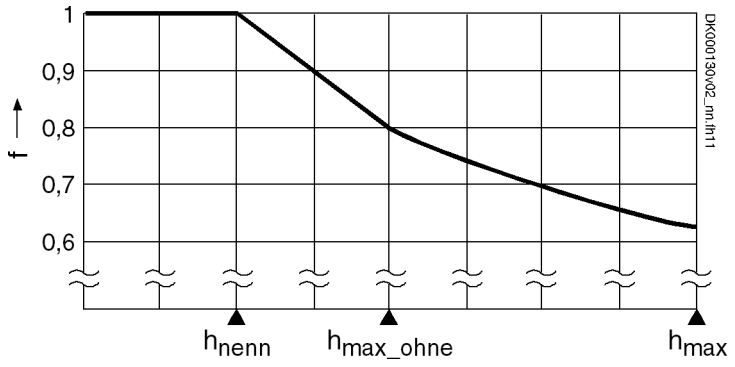		
	h_{max_ohne}	m	2000
	h_{max}	m	4000
Simultaneous derating for ambient temperature **and** installation altitude	Allowed; reduce performance data with the product of the factors f and F_{Ta} (f × F_{Ta})		
Relative humidity		%	5 … 95
Absolute humidity		g/m^3	1 … 29
Climatic category (IEC721)			3K4
Allowed pollution degree (EN50178)			3 (only with connectors plugged in)
Allowed dust, steam			According to degree of protection
Vibration sine: Amplitude (peak-peak) at 10 … 57 Hz[1)]		mm	-
Vibration sine: Acceleration at 57 … 150 Hz[1)]		g	-
Vibration noise (random) frequency[1)]		Hz	-
Vibration noise (random) spectral acceleration density, amplitude[1)]		g^2/Hz	-
Vibration noise (random) rms value of total acceleration[1)]		g	-
Vibration sine: Acceleration at 10 … 2000 Hz [2)], axial		g	1
Vibration sine: Acceleration at 10 … 2000 Hz [2)], radial		g	1
Overvoltage category			III (according to IEC60664-1)

1) According to EN 60068-2-64
2) According to EN 60068-2-6
3) Reduced performance data for drive controllers: Allowed DC bus continuous power, braking resistor continuous power, continuous current
4) Reduced performance data for motors: Performance, torque S1 and S3

Fig.4-7: Ambient and Operating Conditions (KSM, KMS)

Courtesy of CMA/Flodyne/Hydradyne ▪ Motion Control ▪ Hydraulic ▪ Pneumatic ▪ Electrical ▪ Mechanical ▪ (800) 426-5480 ▪ www.cmafh.com

4.3.2 Mounting Position

Mounting Positions of Components

NOTICE **Risk of damage to the components by incorrect mounting position!**

Only operate the components in their allowed mounting positions.

For supply units and drive controllers installed in control cabinets, only the mounting position G1 is allowed as a matter of principle. (G1: See definition of the different mounting positions below).

☞ The **figure below** shows the **theoretically** possible mounting positions. The figure explains the abbreviations **G1…G5**. These abbreviations are used to specify the allowed mounting positions of the components.

Definition of the Mounting Positions of Components

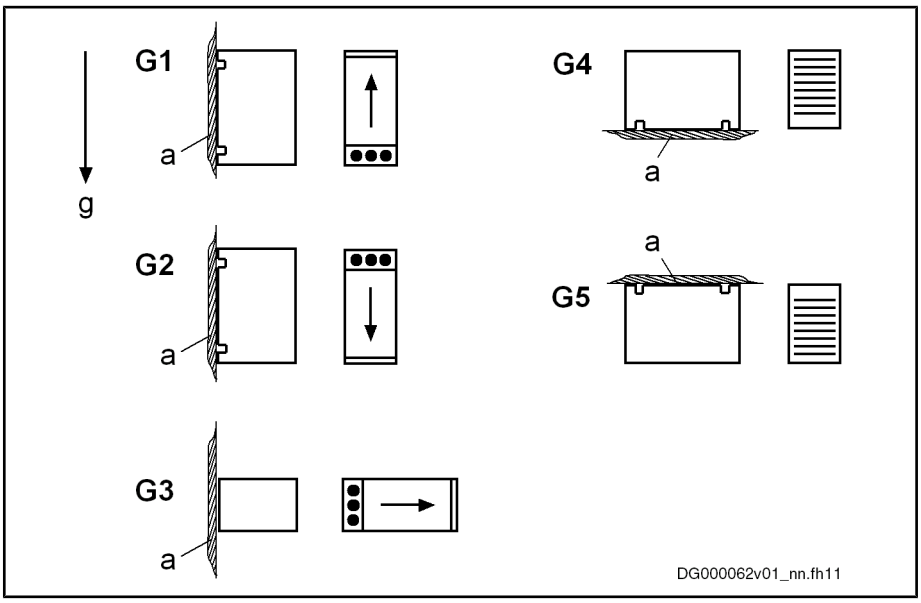

a	Mounting surface
g	Direction of gravitational force
G1	Normal mounting position. The natural convection supports the forced cooling air current. This avoids the generation of pockets of heat in the component.
G2	180° to normal mounting position
G3	Turned by 90° from vertical to horizontal mounting position
G4	Bottom mounting; mounting surface on bottom of control cabinet
G5	Top mounting; mounting surface at top of control cabinet

Fig.4-8: Definition of the Mounting Positions of Components

Mounting Positions of Motors

Definition of the Mounting Positions

Distributed servo drives KSM and motors MSK can be supplied in type of construction B05. The allowed types of installation according to EN 60034-7:1993 are contained in the following table.

Type of construction of motor B05		
IM B5	IM V1	IM V3
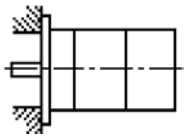	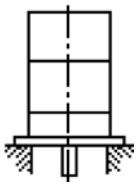	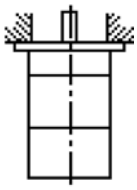
Flange mounting on drive side of flange	Flange mounting on drive side of flange, drive side bottom	Flange mounting on drive side of flange, drive side top

Fig.4-9: Allowed Types of Installation According to EN 60034-7:1993

NOTICE **Motor damage due to penetration of liquids!**

If motors are attached according to IM V3, fluid present at the output shaft over a prolonged time may penetrate and cause damage to the motors.

⇒ Ensure that fluid cannot be present at the output shaft.

4.3.3 Compatibility With Foreign Matters

All Rexroth controls and drives are developed and tested according to the state-of-the-art technology.

As it is impossible to follow the continuing development of all materials (e.g. lubricants in machine tools) which may interact with the controls and drives, it cannot be completely ruled out that any reactions with the materials we use might occur.

For this reason, before using the respective material a compatibility test has to be carried out for new lubricants, cleaning agents etc. and our housings/materials.

Courtesy of CMA/Flodyne/Hydradyne ▪ Motion Control ▪ Hydraulic ▪ Pneumatic ▪ Electrical ▪ Mechanical ▪ (800) 426-5480 ▪ www.cmafh.com

Courtesy of CMA/Flodyne/Hydradyne ▪ Motion Control ▪ Hydraulic ▪ Pneumatic ▪ Electrical ▪ Mechanical ▪ (800) 426-5480 ▪ www.cmafh.com

4.3.4 Prime Coat and Varnish of Motor Housings

Specification of Housing Varnish

Color	Black (RAL9005)
Resistance	Resistant to • Diluted acids/lyes • Water, sea water, waste water • Common mineral oils
	In restricted form resistant to • Organic solvents • Hydraulic oil
	Nonresistant to • Concentrated acids/lyes
Additional varnish	• Allowed for **standard products**. It is permitted to provide the housing with additional varnish with a maximum coat thickness of 40 µm. Before varnishing, verify the adhesion and resistance of the new varnish. • Not allowed for **Ex/Atex** products.

Fig.4-10: Properties of Housing Varnish

☞ When applying additional varnish, cover all safety instructions, type plates and exposed plug-in connectors with varnish protection.

4.4 Voltage Test and Insulation Resistance Test

According to standard, the **components** of the Rexroth IndraDrive Mi range are tested with voltage.

Test	Test rate
Voltage test	100% (EN61800-5-1)
Insulation resistance test	100% (EN60204-1)

Fig.4-11: Applied Standards

NOTICE **Risk of damage to the installed Rexroth components by customer-side test of the machine or installation!**

Before making a voltage test or an insulation resistance test for an **installation or machine** in which these components are used:

Disconnect all connections to the Rexroth components or disconnect the plug-in connections to protect the electronic components.

4.5 Control Voltage (24V Supply)

☞ **PELV[1] for 24V power supply unit**

For the 24V supply of the devices of the Rexroth IndraDrive Mi range, use a power supply unit or a control-power transformer with protection by PELV according to IEC 60204-1 (section 6.4).

In the scope of CSA/UL, the data of the control-power transformer are limited to:

- Max. output voltage: 42.4 V_{peak} or 30 V_{ac}
- Max. output power: 10000 VA

The data in the table below generally apply to the 24V supply of the devices of the Rexroth IndraDrive Mi range. For other data, such as power consumption and inrush currents, see the technical data of the respective device.

The specified values apply at the connections (+24V, 0V) to the "24V supply" of the devices!

Description	Symbol	Unit	Value
Control voltage for drive systems **without** operation of **motor holding brakes** in Rexroth motors	U_{N3}	V	**20,4 … 28,8** (24 +20% -15%) When using supply units HMV01.1E, HMV01.1R, HMV02.1R, HLB01.1D: **22,8 … 27,3** (24 -5%, 26 +5%)
Control voltage for drive systems **with** operation of **motor holding brakes** in Rexroth motors	U_{N3}	V	Depending on the motor cable length, the control voltage must be within the following voltage ranges: • Motor cable length < 50 m: **22,8 … 25,2** (24 ±5%) • Motor cable length > 50 m: **24,7 … 27,3** (26 ±5%) Take the data of the corresponding motor holding brake into account.
External control voltage at devices of design "NNN**V**" (see type code HCS02, HCS03; other design: DC 24 V power supply from the DC bus and external)	U_{N3}	V	**26 … 28,8** The output voltage of the internal switching power supply unit is 24 ±10%.
Max. ripple content	w	-	The amplitudes of the alternating component on U_{N3} must be within the specified voltage range.
Maximum allowed overvoltage	U_{N3max}	V	33 (max. 1 ms)

Fig.4-12: Control Voltage

1) Protective Extra Low Voltage

Courtesy of CMA/Flodyne/Hydradyne ▪ Motion Control ▪ Hydraulic ▪ Pneumatic ▪ Electrical ▪ Mechanical ▪ (800) 426-5480 ▪ www.cmafh.com

Courtesy of CMA/Flodyne/Hydradyne ▪ Motion Control ▪ Hydraulic ▪ Pneumatic ▪ Electrical ▪ Mechanical ▪ (800) 426-5480 ▪ www.cmafh.com

☞ **Overvoltage**

Overvoltage greater than 33 V has to be discharged by means of the appropriate electrical equipment of the machine or installation.

This includes:

- 24V power supply units that reduce incoming overvoltage to the allowed value.
- Overvoltage limiters at the control cabinet input that limit existing overvoltage to the allowed value. This, too, applies to long 24V lines that have been run in parallel to power cables and mains cables and can absorb overvoltage by inductive or capacitive coupling.

☞ **Insulation monitoring impossible**

The input 0 V is connected in conductive form to the housing potential. Insulation monitoring at +24 V and 0 V against housing is impossible.

Courtesy of CMA/Flodyne/Hydradyne ▪ Motion Control ▪ Hydraulic ▪ Pneumatic ▪ Electrical ▪ Mechanical ▪ (800) 426-5480 ▪ www.cmafh.com

5 Technical Data of the Components

5.1 Explanation of Terms and Definitions

Data Sheet KSM - Distributed Servo Drive With Holding Brake (Optional)

Description	Symbol	Unit	Definition
Listing according to UL standard (UL)			Standard according to which UL listing takes place
Listing according to CSA standard (UL)			Standard according to which CSA listing takes place
UL files (UL)			UL file number under which the components are listed
Short circuit current rating, SCCR, symmetrical amperes (UL) [1]	I_{SCCR}	A_{rms}	Current which may flow at the point of infeed in the case of error (short circuit)
Ambient temperature during operation	T_{um}	°C	Ambient temperature during operation
Degree of protection			According to EN 60529
Ambient conditions according to UL50/50E			Ambient conditions according to UL50/50E
Mass [2]	m_{mot}	kg	Specified value plus optional holding brake
Average sound pressure level (accuracy class 2) at P_{DC_cont} [3]	L_P	dB (A)	According to DIN EN ISO 11205; comparative value at distance 1 m, out of cabinet
Control voltage supply			
Rated control voltage input (UL)[4]	U_{N3}	V	Supply voltage of control electronics
Rated power consumption control voltage input at U_{N3} (UL) [5]	P_{N3}	W	Power with which the power supply unit is loaded for 24V supply
Data power section			
Rated power (t > 10 min)	P_{LN_nenn}	W	Power consumption from the DC bus (L+, L-) at the point of maximum power (PML)
Power dissipation at continuous current and continuous DC bus power respectively (UL)[6]	P_{Diss_cont}	W	Occurring power dissipation at P_{LN_nenn}
Rated input voltage, power (UL) [7]	U_{LN_nenn}	V DC	Voltage with which the component is supplied at the power input
Capacitance in DC bus	C_{DC}	mF	Capacitance in DC bus
Allowed switching frequencies [8]	f_s	kHz	Allowed switching frequencies
Data motor stage			
Continuous torque at standstill 60 K	M_{0_60}	Nm	Continuous torque that can be delivered at the motor output shaft at speed n ≥ 0.01 Hz and 4 kHz of switching frequency.
Maximum torque	M_{max}	Nm	Maximum torque that can be delivered for approx. 400 ms at maximum current I_{max} (manufacturing tolerances +5% / -20%).
Maximum current	$I_{max(rms)}$	A	Maximum, temporarily allowed phase current (r.m.s. value) in the motor winding without damaging effect on the permanent-magnet circuit of the motor.

Courtesy of CMA/Flodyne/Hydradyne ▪ Motion Control ▪ Hydraulic ▪ Pneumatic ▪ Electrical ▪ Mechanical ▪ (800) 426-5480 ▪ www.cmafh.com

Technical Data of the Components

Description	Symbol	Unit	Definition
Torque constant at 20 °C [9]	K_{M_N}	Nm/A	Ratio of torque to current in the motor winding (r.m.s. value) at motor temperature 20 °C. Unit (Nm/A).
Constant voltage at 20 °C [10]	K_{EMK_1000}	V/min^{-1}	R.m.s. value of the induced motor voltage at motor temperature 20 °C and 1000 revolutions per minute. Unit ($V/1000\ min^{-1}$).
Rotor inertia [11]	J_{rot}	$kg*m^2$	Inertia of rotor **without** optional holding brake
Thermal time constant	T_{th}	min	Time of the temperature rise to 63% of the end temperature of the motor housing with the motor loaded with the allowed S1 continuous torque. The thermal time constant is determined by the size of the motors and the method of cooling used. 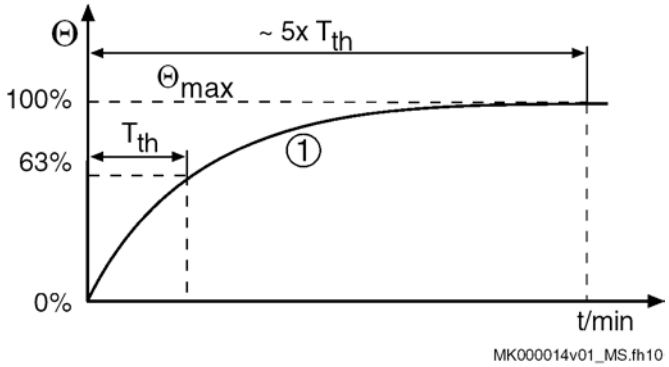 1: Course of the motor housing temperature over time $Θ_{max}$: Highest temperature (motor housing) T_{th} : Thermal time constant
Maximum speed	n_{max}	min^{-1}	Maximum allowed speed of the motor. Limiting factors can have mechanical (centrifugal forces, bearing stress) or electrical (DC bus voltage) causes.
Insulation class according to DIN EN 60034–1			Insulation class
Data optional holding brake			
Holding torque	M_4	Nm	Transmittable holding torque
Clamping delay	t_1	ms	ON delay when clamping
Release delay	t_2	ms	Release delay
Mass brake	m_{Br}	kg	Add mass of holding brake to mass of motor
Inertia brake	J_{rot}	$kg*m^2$	Add inertia of holding brake to rotor inertia

1) Suitable for use on a circuit capable of delivering not more than this SCCR value, 600 V AC or less. The drive series shall be used with listed AC input line fuses or listed circuit breakers specified in this documentation.
2) Value plus holding brake
3) According to DIN EN ISO 11205; comparative value at distance 1 m, out of cabinet; HCS types with order code -L***: load-dependent
4) HMV, HCS: Plus dissipation of braking resistor, control section; KSM: Plus rated power consumption control voltage input
5) Observe supply voltage for motor holding brakes
6) HMx: Plus holding brake and control section; KCU: Dependent on number of axes; KSM: Plus holding brake ($U_N \times I_N$)

7)	HMS, HMD, HLB, HLC, KCU: DC bus L+, L-; HMV, HCS: Mains input L1, L2, L3
8)	Also depending on firmware and control section; see parameter description "P-0-0001, Switching frequency of the power output stage"; see "P-0-4058, Amplifier type data"
9) 10)	Manufacturing tolerance ±5%
11)	Specified without brake. If necessary, add the inertia of the brake.
Fig.5-1:	*Data Sheet KSM01.2B-041, KSM01.2B-061, KSM01.2B-071, KSM01.2B-076*

Motor Data

The motor data and characteristics are determined under the following conditions:

- Ambient temperature 40 °C
- Insulated structure (aluminum flange)
- Amplifier temperature S-0-0384 = 100 °C (ΔT = 60 K); this temperature is slightly higher than the temperature of the motor housing.
- Switching frequency 4 kHz (at 8 kHz reduced continuous torque and peak torque)
- Motors with radial shaft sealing ring

Operation Modes

Distributed servo drives KSM are documented according to the test criteria and measuring methods of EN 60034-1. The specified characteristics correspond to operation modes S1 or S3.

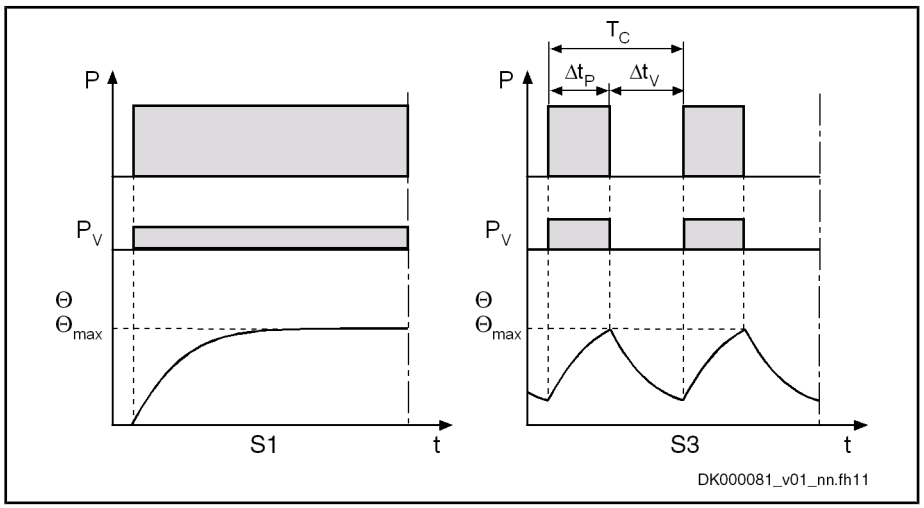

P	Load
P_V	Electric losses
Θ	Temperature
$Θ_{max}$	Highest temperature (motor housing)
t	Time
T_C	Cycle duration
$Δt_P$	Operating time with constant load
$Δt_V$	Idle time
Fig.5-2:	*Operation Modes According to EN 60034-1: 1998*

Duty Cycle

Operation mode S3 (intermittent duty) is supplemented by specification of the duty cycle ED %. The duty cycle is calculated as follows:

Courtesy of CMA/Flodyne/Hydradyne ▪ Motion Control ▪ Hydraulic ▪ Pneumatic ▪ Electrical ▪ Mechanical ▪ (800) 426-5480 ▪ www.cmafh.com

Courtesy of CMA/Flodyne/Hydradyne ▪ Motion Control ▪ Hydraulic ▪ Pneumatic ▪ Electrical ▪ Mechanical ▪ (800) 426-5480 ▪ www.cmafh.com

Technical Data of the Components

$$ED = \frac{\Delta t_p}{T_C} \cdot 100\%$$

ED Relative duty cycle in %
Δt_P Operating time with constant load
Fig.5-3: Relative Duty Cycle

The values specified in the documentation have been determined on the basis of the following parameters:

Cycle duration: 1 min

Duty cycle ED: 25%

DC Continuous Power P_{DC}

Power consumption at the point of maximum power (PML); mechanical power and power dissipation

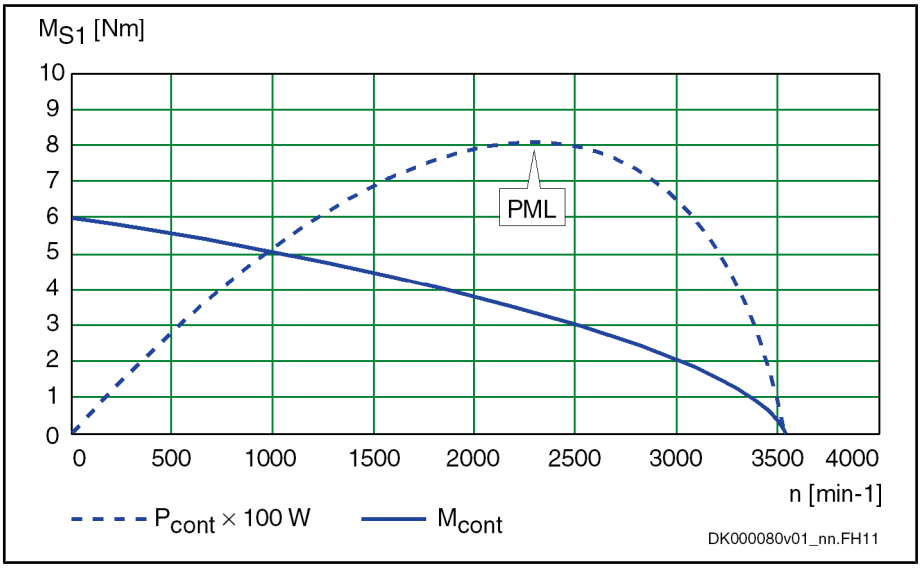

M_{cont} Continuous torque
M_{S1} S1 torque
n Speed
P_{cont} Continuous power
P_{ML} Point of maximum power
Fig.5-4: Power Consumption

DC Peak Power P_{DC_max}

Electric peak power (worst-case value for dimensioning the supply unit)

Courtesy of CMA/Flodyne/Hydradyne ▪ Motion Control ▪ Hydraulic ▪ Pneumatic ▪ Electrical ▪ Mechanical ▪ (800) 426-5480 ▪ www.cmafh.com

Sample Characteristic

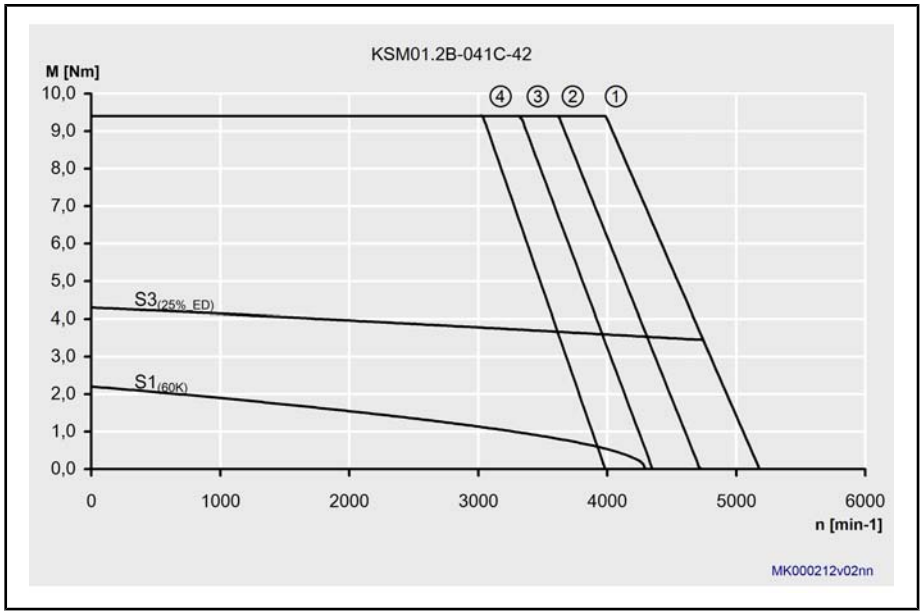

S1	Continuous operation characteristic of the motor (according to EN 60034-1; 1998), natural convection
S3	Intermittent duty characteristic with 25% ED of the motor (according to EN 60034-1; 1998) and max. cycle duration 1 min.
(1)	M_{max}, controlled supply DC 750 V
(2)(3)(4)	M_{max}, uncontrolled supply 3 × AC 400 V; the voltage drop on the supply line has not been taken into account. With a high degree of voltage drop on long motor lines, we have inflected peak torque characteristics (1)(2)(3)(4) at lower speeds.

Fig.5-5: Sample Characteristic

5.2 Distributed Servo Drive KSM

5.2.1 Data Sheet KSM

Data Sheet KSM - Distributed Servo Drive Without Motor Holding Brake

Description	Symbol	Unit	KSM01.2B-041C-42N-__-__0	KSM01.2B-061C-35N-__-__0	KSM01.2B-061C-61N-__-__0	KSM01.2B-071C-24N-__-__0	KSM01.2B-071C-35N-__-__0	KSM01.2B-076C-35N-__-__0
Listing according to UL standard (UL)			UL 508 C					
Listing according to CSA standard (UL)			Canadian National Standard(s) C22.2 No. 14-05					
UL files (UL)			E 134201					
Short circuit current rating (UL)	SCCR	A_{rms}	42000					
Maximum bypass current (UL)		A	25,0					
Ambient temperature range for operation with nominal data	T_{a_work}	°C	0...40					
Degree of protection according to IEC60529	---		IP 65					
								Last modification: 2009-09-23

Courtesy of CMA/Flodyne/Hydradyne ▪ Motion Control ▪ Hydraulic ▪ Pneumatic ▪ Electrical ▪ Mechanical ▪ (800) 426-5480 ▪ www.cmafh.com

Technical Data of the Components

Description	Symbol	Unit	KSM01.2B-041C-42N-__-__0	KSM01.2B-061C-35N-__-__0	KSM01.2B-061C-61N-__-__0	KSM01.2B-071C-24N-__-__0	KSM01.2B-071C-35N-__-__0	KSM01.2B-076C-35N-__-__0
Ambient conditions according to UL50/50E			4X					
Mass [1]	m_{mot}	kg	5,5	9,5		14,0		14,5
Average sound pressure level (accuracy class 2) at P_{DC_cont} [2]	L_P	dB (A)	< 75					
Data control voltage								
Rated control voltage input (UL) [3]	U_{N3}	V	30...42					
Rated power consumption control voltage input at U_{N3} (UL) [4]	P_{N3}	W	15,5					
Data power section								
Rated power (t > 10 min)	P_{LN_nenn}	W	495,0	930,0	800,0	1360,0	1325,0	1240,0
Power dissipation at continuous current and continuous DC bus power respectively (UL) [5]	P_{Diss_cont}	W	70	140		175		165
Rated input voltage, power (UL) [6]	U_{LN_nenn}	V DC	540...750					
Capacitance in DC bus	C_{DC}	mF	0,012	0,024				
Allowed switching frequencies [7]	f_s	kHz	4; 8					
Data motor stage								
Continuous torque at standstill 60 K	M_{0_60}	Nm	2,2	6,0	5,5	10,5	10,0	8,7
Maximum torque	M_{max}	Nm	9,4	25,0	18,0	35,0	28,0	29,0
Maximum current	$I_{max(rms)}$	A	6,8	14,9	17,7			
Torque constant at 20 °C [8]	K_{M_N}	Nm/A	1,60	2,03	1,16	2,52	1,85	
Constant voltage at 20 °C [9]	K_{EMK_1000}	V/1000 min-1	98,2	125,0	71,5	155,0	114,0	113,8
Rotor inertia	J_{rot}	kg*m²	0,00017	0,00087		0,00173		0,00430
Thermal time constant	T_{th}	min	13	18		15		25
Maximum speed	n_{max}	min^{-1}	5500	4300	6000	3400	4700	
Insulation class according to DIN EN 60034-1	---		155					
								Last modification: 2009-09-23

1) Mass motor without holding brake
2) According to DIN EN ISO 11205; comparative value at distance 1 m, out of cabinet; HCS types with order code -L***: load-dependent
3) Observe supply voltage for motor holding brake
4) HMS, HMD, HCS plus motor holding brake and control section; HCS01 including control section
5) Plus dissipation of braking resistor and control section
6) DC bus L+, L-; mains input L1, L2, L3

7) Also depending on firmware and control section; see parameter description "P-0-0001, Switching frequency of the power output stage"; see "P-0-4058, Amplifier type data"

8) 9) Manufacturing tolerance ±5%

Fig.5-6: KSM Without Motor Holding Brake - Technical Data

Data Sheet KSM - Distributed Servo Drive With Motor Holding Brake

Description	Symbol	Unit	KSM01.2 B-041C-42N-__-__2	KSM01.2 B-061C-35N-__-__2	KSM01.2 B-061C-61N-__-__2	KSM01.2 B-071C-24N-__-__2	KSM01.2 B-071C-35N-__-__2	KSM01.2 B-076C-35N-__-__2
Listing according to UL standard (UL)			UL 508 C					
Listing according to CSA standard (UL)			Canadian National Standard(s) C22.2 No. 14-05					
UL files (UL)			E 134201					
Short circuit current rating (UL)	SCCR	A_{rms}	42000					
Maximum bypass current (UL)		A	25,0					
Ambient temperature range for operation with nominal data	T_{a_work}	°C	0...40					
Degree of protection according to IEC60529	---		IP 65					
Ambient conditions according to UL50/50E			4X					
Mass 1)	m_{mot}	kg	5,8	10,0		15,1		15,6
Average sound pressure level (accuracy class 2) at P_{DC_cont} 2)	L_P	dB (A)	< 75					
Data control voltage								
Rated control voltage input (UL)3)	U_{N3}	V	30...42					
Rated power consumption control voltage input at U_{N3} (UL) 4)	P_{N3}	W	27,5	33,5		39,5		
Data power section								
Rated power (t > 10 min)	P_{LN_nenn}	W	495,0	930,0	800,0	1360,0	1325,0	1240,0
Power dissipation at continuous current and continuous DC bus power respectively (UL)5)	P_{Diss_cont}	W	70	140		175		165
Rated input voltage, power (UL) 6)	U_{LN_nenn}	V DC	540...750					
Capacitance in DC bus	C_{DC}	mF	0,012	0,024				
Allowed switching frequencies 7)	f_s	kHz	4; 8					
Data motor stage								
Continuous torque at standstill 60 K	M_{0_60}	Nm	2,2	6,0	5,5	10,5	10,0	8,7
Maximum torque	M_{max}	Nm	9,4	25,0	18,0	35,0	28,0	29,0
Last modification: 2009-09-23								

Courtesy of CMA/Flodyne/Hydradyne ▪ Motion Control ▪ Hydraulic ▪ Pneumatic ▪ Electrical ▪ Mechanical ▪ (800) 426-5480 ▪ www.cmafh.com

Courtesy of CMA/Flodyne/Hydradyne ▪ Motion Control ▪ Hydraulic ▪ Pneumatic ▪ Electrical ▪ Mechanical ▪ (800) 426-5480 ▪ www.cmafh.com

Technical Data of the Components

Description	Symbol	Unit	KSM01.2B-041C-42N-__-__2	KSM01.2B-061C-35N-__-__2	KSM01.2B-061C-61N-__-__2	KSM01.2B-071C-24N-__-__2	KSM01.2B-071C-35N-__-__2	KSM01.2B-076C-35N-__-__2
Maximum current	$I_{max(rms)}$	A	6,8	14,9	17,7			
Torque constant at 20 °C 8)	K_{M_N}	Nm/A	1,60	2,03	1,16	2,52	1,85	
Constant voltage at 20 °C 9)	K_{EMK_1000}	V/1000 min-1	98,2	125,0	71,5	155,0	114,0	113,8
Rotor inertia	J_{rot}	kg*m²	0,00019	0,00093		0,00189		0,00446
Thermal time constant	T_{th}	min	13	18		15		25
Maximum speed	n_{max}	min^{-1}	5500	4300	6000	3400	4700	
Insulation class according to DIN EN 60034-1	---		155					
Holding brake data								
Holding torque	M_4	Nm	4,0	10,0		16,0		
Clamping delay	t_1	ms	25			30		
Release delay	t_2	ms	35	40		50		
Mass brake	m_{Br}							
Inertia brake	J_{rot}	kg*m²	0,000023	0,000059		0,000161		
Last modification: 2009-09-23								

1) Mass motor without holding brake
2) According to DIN EN ISO 11205; comparative value at distance 1 m, out of cabinet; HCS types with order code -L***: load-dependent
3) Observe supply voltage for motor holding brake
4) HMS, HMD, HCS plus motor holding brake and control section; HCS01 including control section
5) Plus dissipation of braking resistor and control section
6) DC bus L+, L-; mains input L1, L2, L3
7) Also depending on firmware and control section; see parameter description "P-0-0001, Switching frequency of the power output stage"; see "P-0-4058, Amplifier type data"
8) 9) Manufacturing tolerance ±5%

Fig.5-7: KSM With Motor Holding Brake - Technical Data

5.2.2 KSM Characteristics

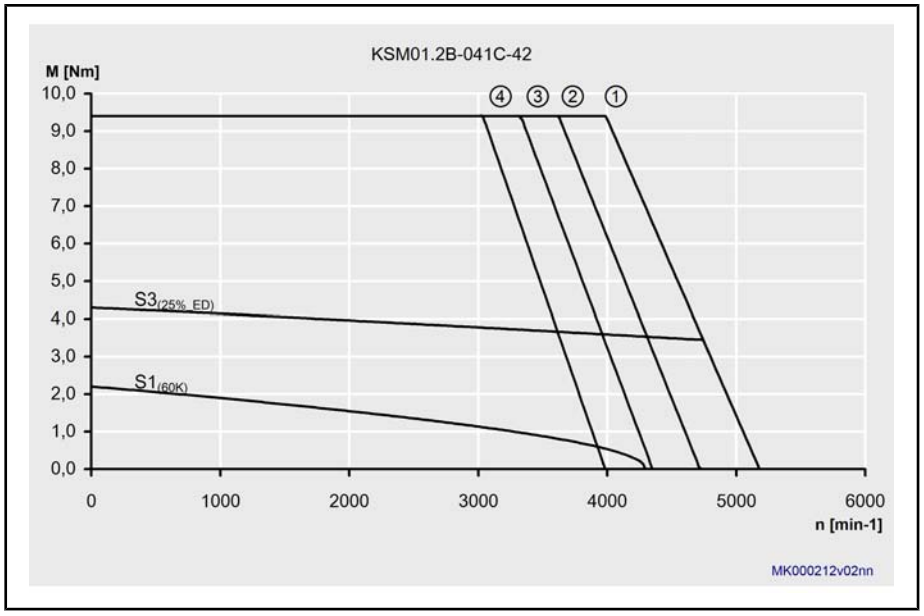

S1, S3	Characteristics apply to a PWM frequency of 4 kHz
(1)	M_{max}, controlled supply (1) 3 × AC 400 V
(2)(3)(4)	M_{max}, uncontrolled supply (2) 3 × AC 480 V, (3) 3 × AC 440 V, (4) 3 × AC 400 V

Fig.5-8: Characteristics KSM01.2B-041C-42

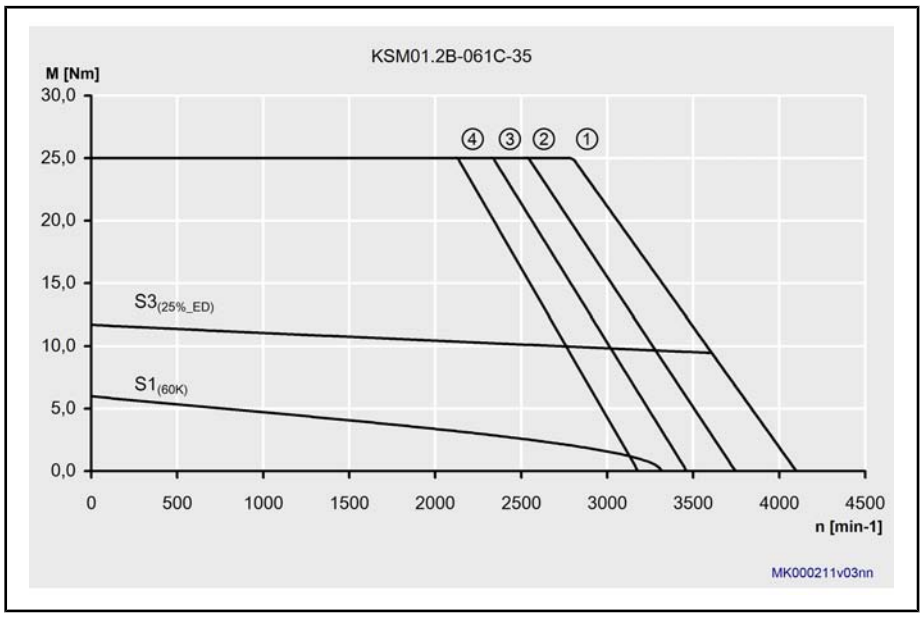

S1, S3	Characteristics apply to a PWM frequency of 4 kHz
(1)	M_{max}, controlled supply (1) 3 × AC 400 V
(2)(3)(4)	M_{max}, uncontrolled supply (2) 3 × AC 480 V, (3) 3 × AC 440 V, (4) 3 × AC 400 V

Fig.5-9: Characteristics KSM01.2B-061C-35

Courtesy of CMA/Flodyne/Hydradyne ▪ Motion Control ▪ Hydraulic ▪ Pneumatic ▪ Electrical ▪ Mechanical ▪ (800) 426-5480 ▪ www.cmafh.com

Courtesy of CMA/Flodyne/Hydradyne ▪ Motion Control ▪ Hydraulic ▪ Pneumatic ▪ Electrical ▪ Mechanical ▪ (800) 426-5480 ▪ www.cmafh.com

Technical Data of the Components

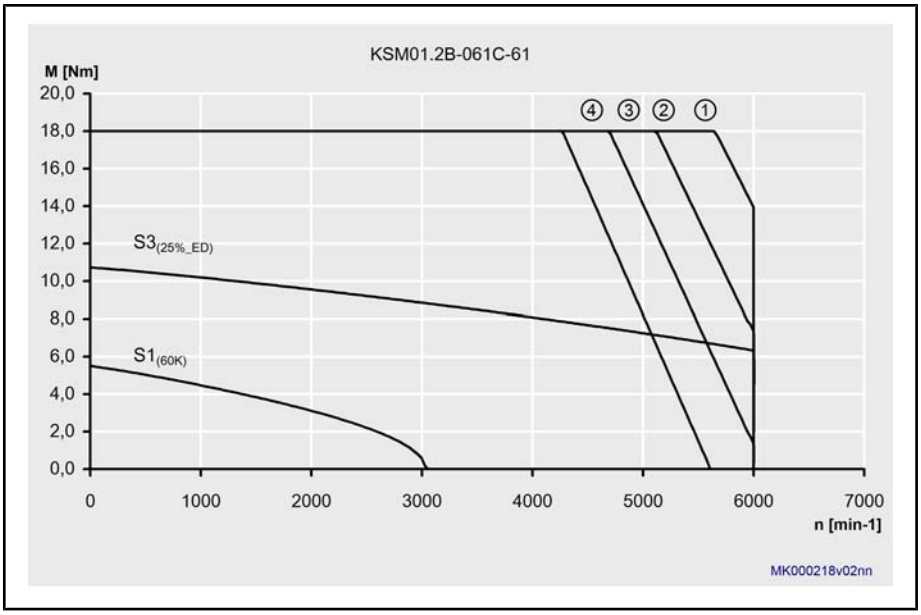

S1, S3	Characteristics apply to a PWM frequency of 4 kHz
(1)	M_{max}, controlled supply (1) 3 × AC 400 V
(2)(3)(4)	M_{max}, uncontrolled supply (2) 3 × AC 480 V, (3) 3 × AC 440 V, (4) 3 × AC 400 V

Fig.5-10: Characteristics KSM01.2B-061C-61

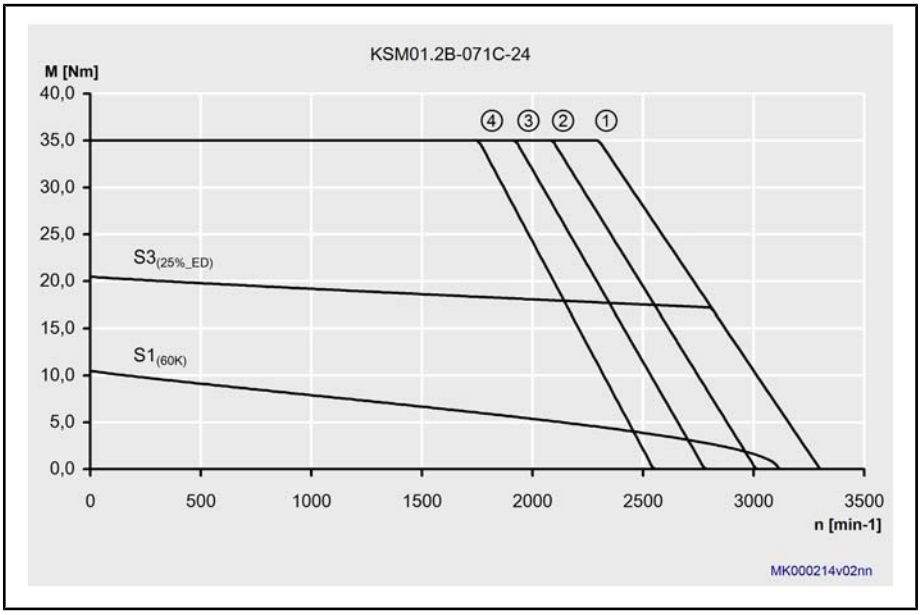

S1, S3	Characteristics apply to a PWM frequency of 4 kHz
(1)	M_{max}, controlled supply (1) 3 × AC 400 V
(2)(3)(4)	M_{max}, uncontrolled supply (2) 3 × AC 480 V, (3) 3 × AC 440 V, (4) 3 × AC 400 V

Fig.5-11: Characteristics KSM01.2B-071C-24

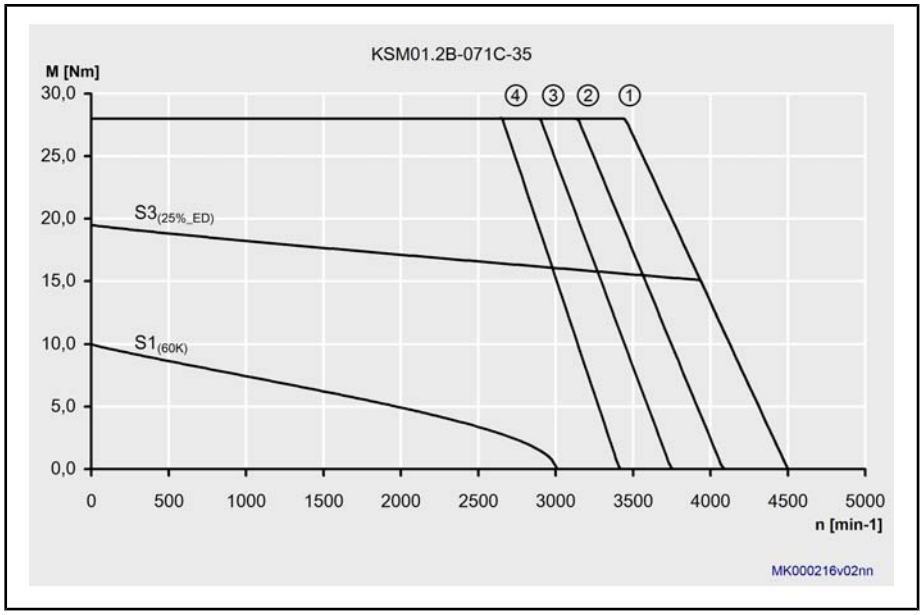

S1, S3	Characteristics apply to a PWM frequency of 4 kHz
(1)	M_{max}, controlled supply (1) 3 × AC 400 V
(2)(3)(4)	M_{max}, uncontrolled supply (2) 3 × AC 480 V, (3) 3 × AC 440 V, (4) 3 × AC 400 V

Fig.5-12: Characteristics KSM01.2B-071C-35

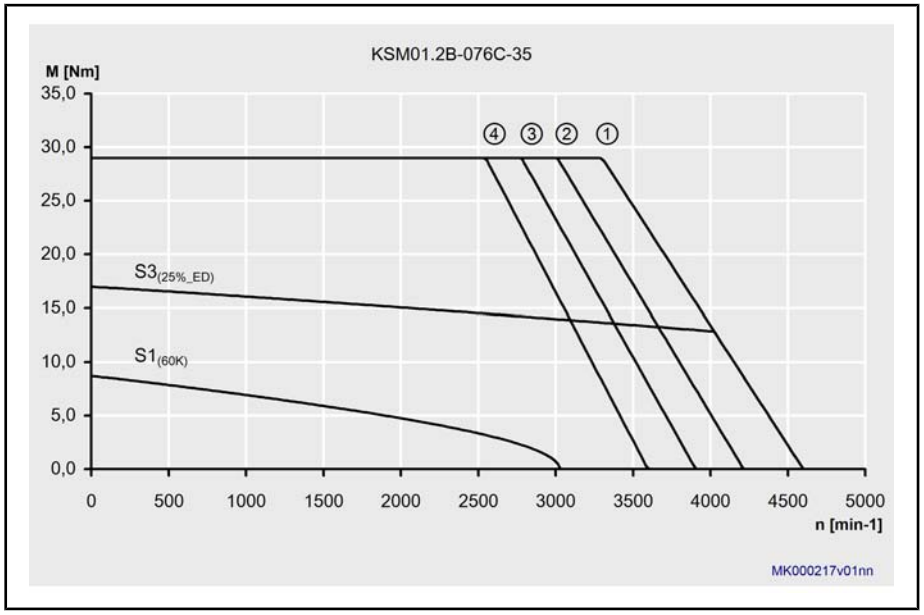

S1, S3	Characteristics apply to a PWM frequency of 4 kHz
(1)	M_{max}, controlled supply (1) 3 × AC 400 V
(2)(3)(4)	M_{max}, uncontrolled supply (2) 3 × AC 480 V, (3) 3 × AC 440 V, (4) 3 × AC 400 V

Fig.5-13: Characteristics KSM01.2B-076C-35

Courtesy of CMA/Flodyne/Hydradyne ▪ Motion Control ▪ Hydraulic ▪ Pneumatic ▪ Electrical ▪ Mechanical ▪ (800) 426-5480 ▪ www.cmafh.com

Courtesy of CMA/Flodyne/Hydradyne ▪ Motion Control ▪ Hydraulic ▪ Pneumatic ▪ Electrical ▪ Mechanical ▪ (800) 426-5480 ▪ www.cmafh.com

Technical Data of the Components

5.2.3 Dimensions and Technical Design

Dimensions

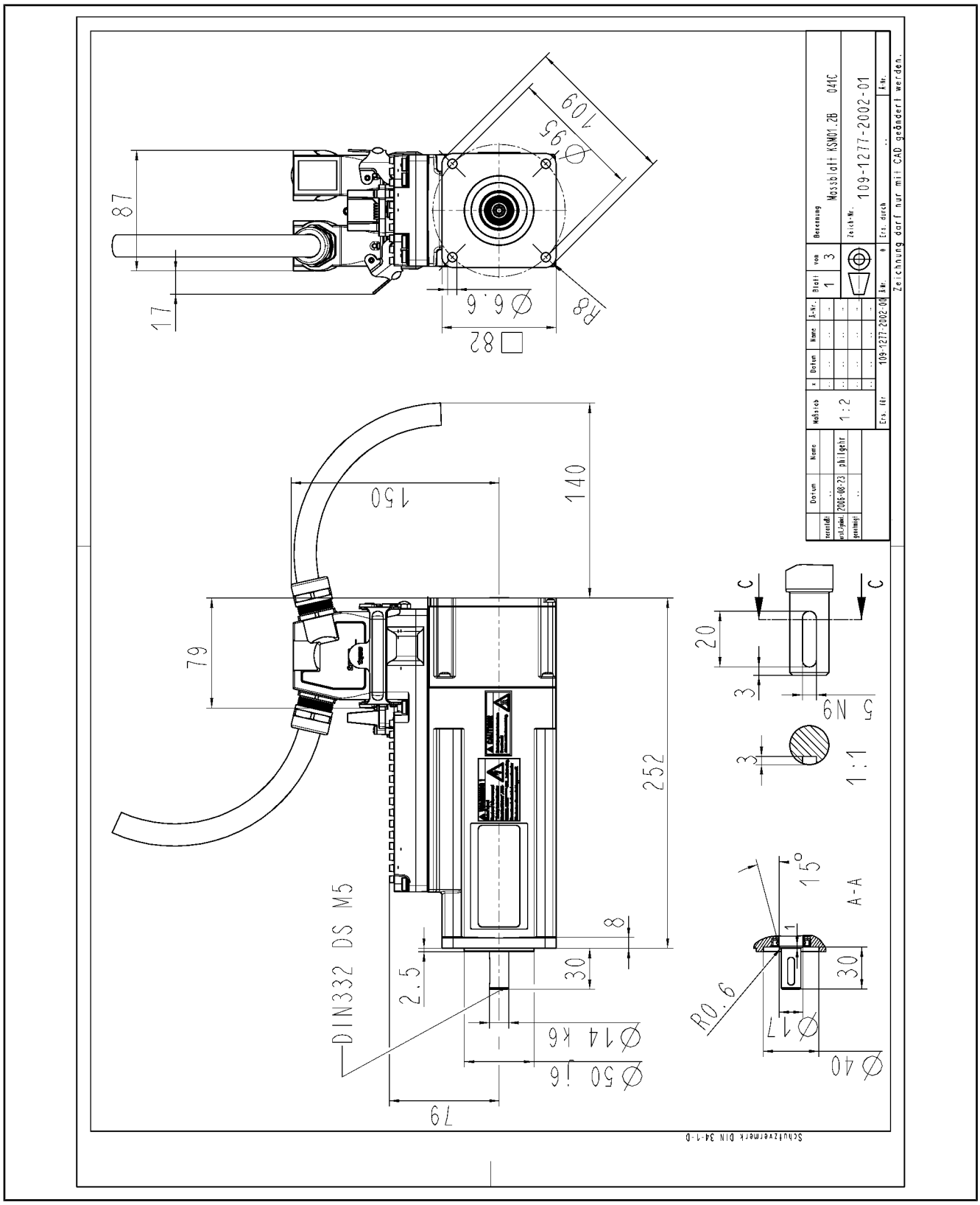

Fig.5-14: Dimensions KSM01.2B-041

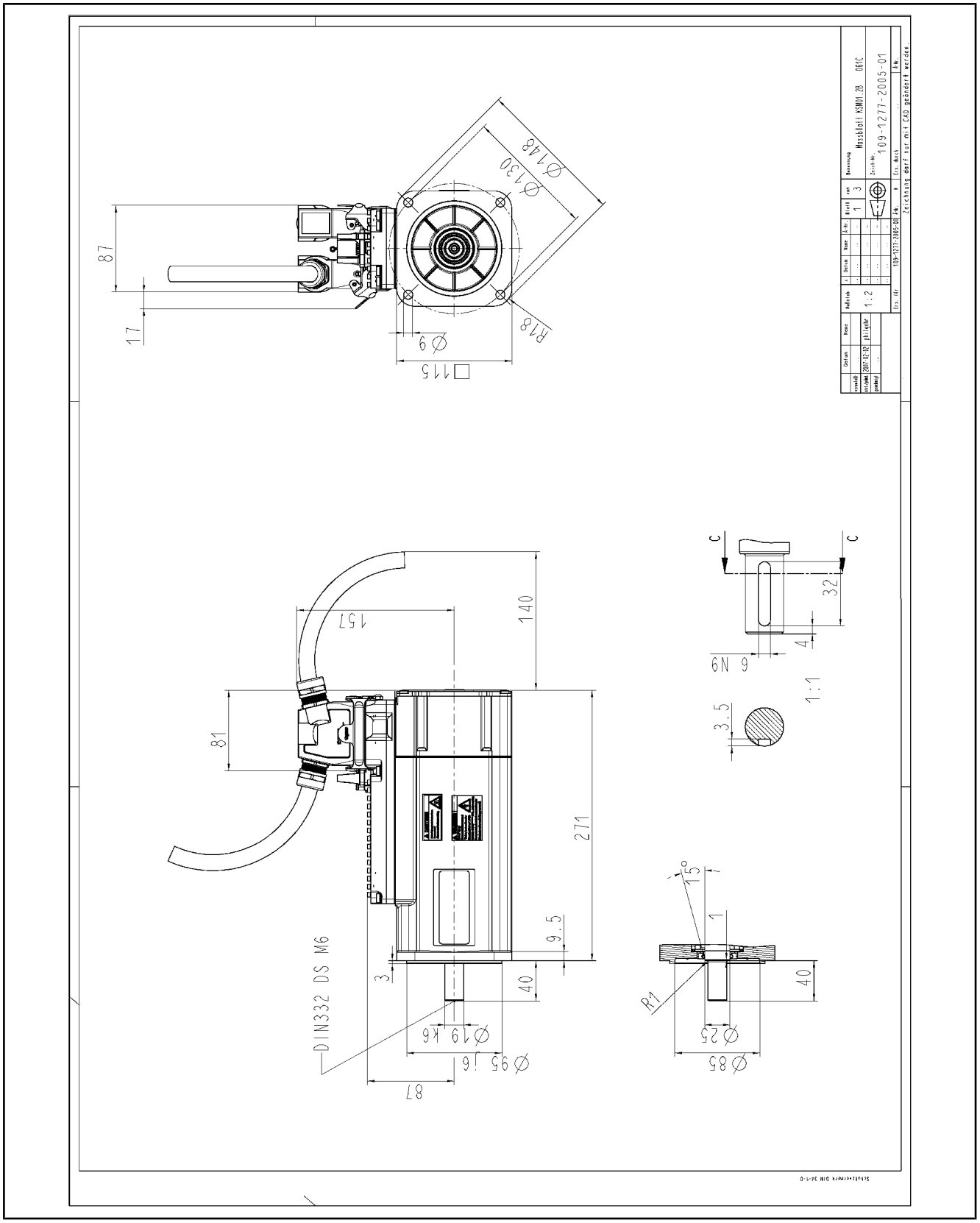

Fig.5-15: Dimensions KSM01.2B-061

Courtesy of CMA/Flodyne/Hydradyne ▪ Motion Control ▪ Hydraulic ▪ Pneumatic ▪ Electrical ▪ Mechanical ▪ (800) 426-5480 ▪ www.cmafh.com

Courtesy of CMA/Flodyne/Hydradyne ▪ Motion Control ▪ Hydraulic ▪ Pneumatic ▪ Electrical ▪ Mechanical ▪ (800) 426-5480 ▪ www.cmafh.com

Technical Data of the Components

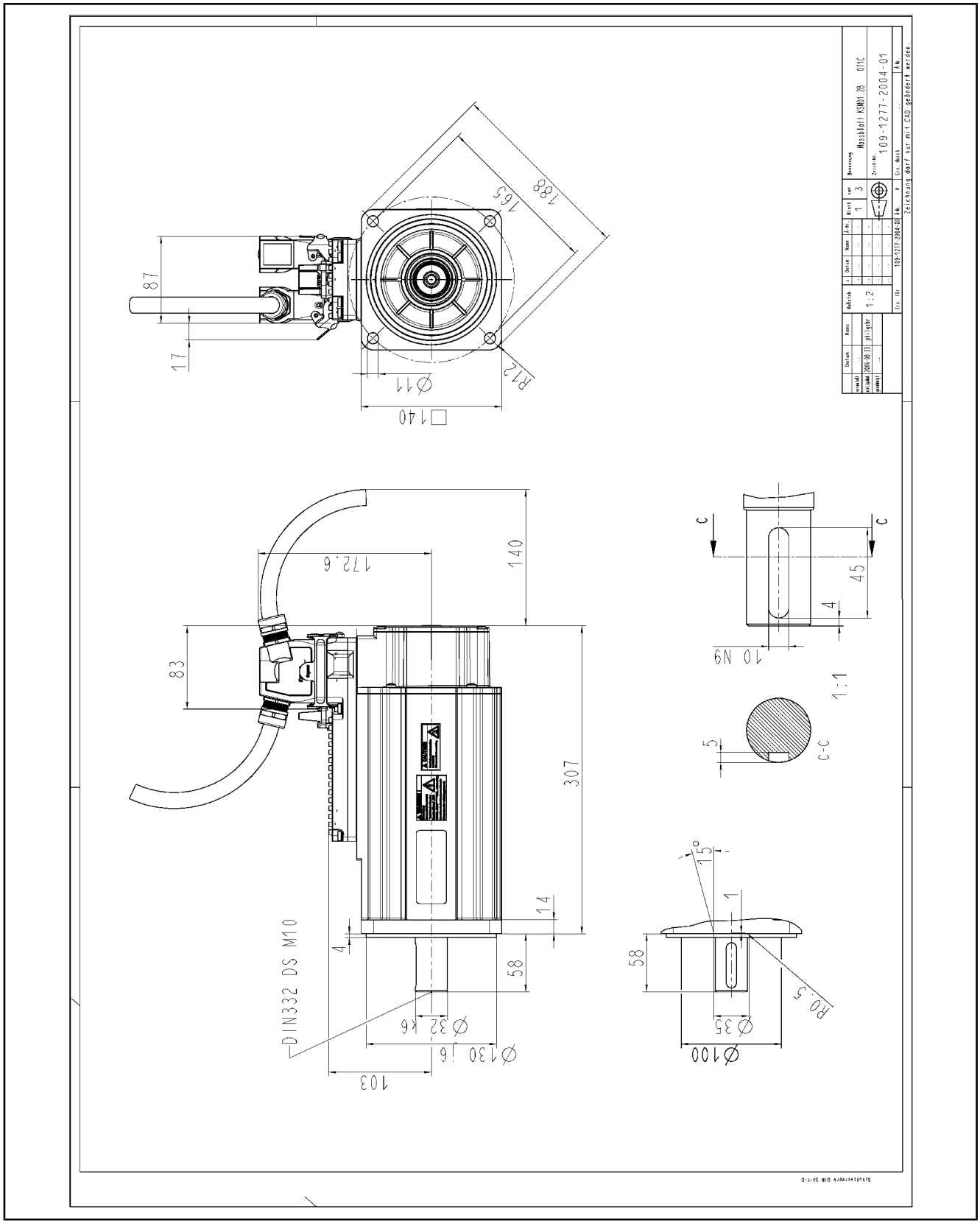

Fig.5-16: Dimensions KSM01.2B-071

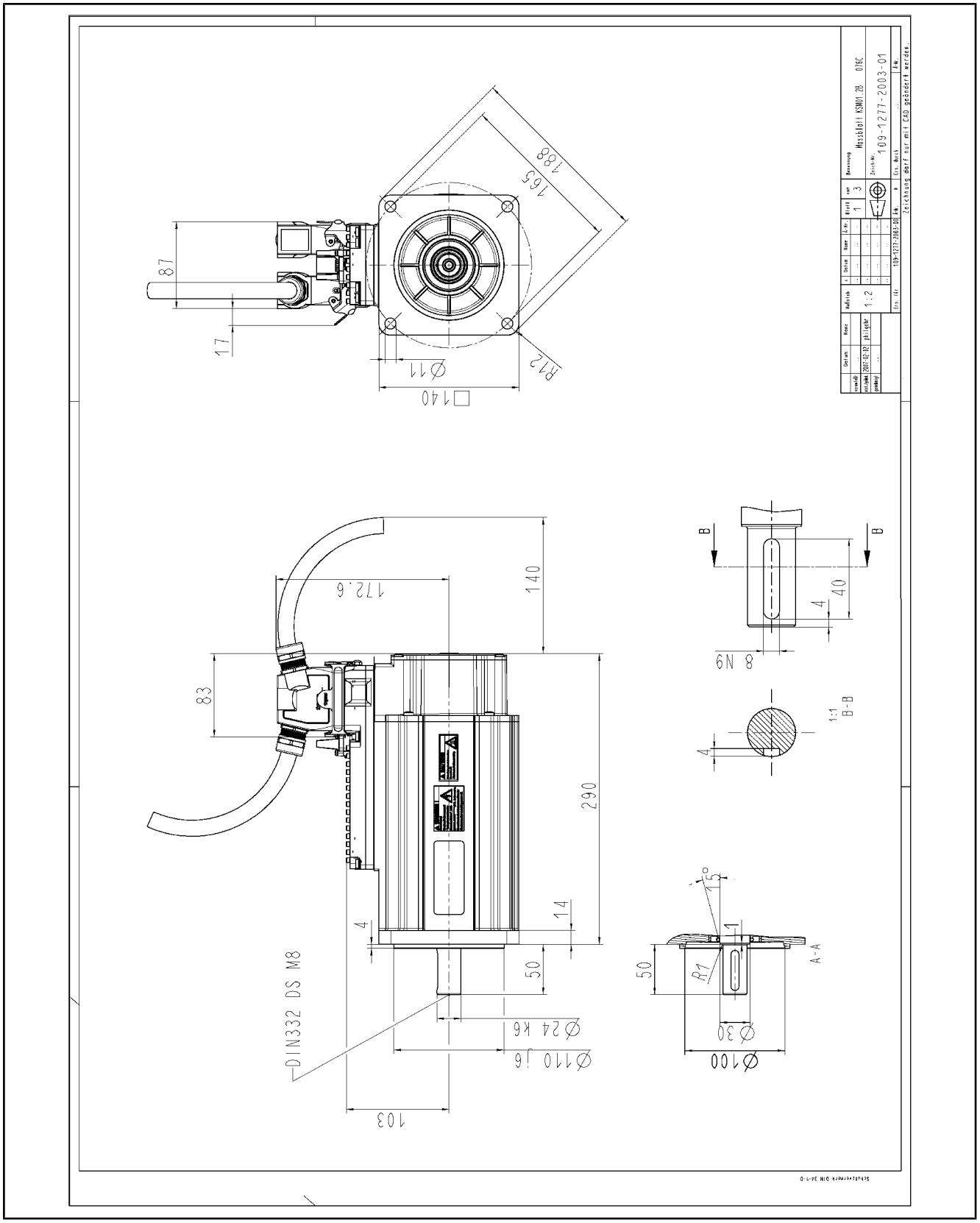

Fig.5-17: Dimensions KSM01.2-076

Courtesy of CMA/Flodyne/Hydradyne ▪ Motion Control ▪ Hydraulic ▪ Pneumatic ▪ Electrical ▪ Mechanical ▪ (800) 426-5480 ▪ www.cmafh.com

Courtesy of CMA/Flodyne/Hydradyne ▪ Motion Control ▪ Hydraulic ▪ Pneumatic ▪ Electrical ▪ Mechanical ▪ (800) 426-5480 ▪ www.cmafh.com

Technical Design

Type of Construction of Motor

Type of construction of motor B5 according to EN 60034-7 (additional information see index entry "Type of construction")

Housing Varnish

Black, RAL 9005

Balance Value Level (Balance Quality)

A, according to EN 60034-14: 2004

Concentricity, Run-Out and Alignment

According to DIN 42955, ed. 12.81 (IEC 60072-1)

Encoder	Concentricity tolerance		Run-out and alignment tolerance	
S1, M1	N	---	N	---

Fig.5-18: Tolerance for Concentricity, Run-Out and Alignment, Depending on Encoder Option

Flange

According to DIN 42948, ed. 11.65

Output Shaft, Shaft End and Centering Hole

Motors with keyway have been balanced with the **complete** key. The machine element to be driven must be balanced without a key.

Shaft end cylindrical, acc. to DIN 748 part 3, ed. 07.75 (IEC 60072-1)

Centering hole, according to DIN 332 part 2, ed. 05.83

Type	Corresponding key, according to DIN 6885-A (is not part of the scope of supply of the motors)	Centering hole, according to DIN 332 part 2, ed. 05.83
KSM01.2B-041	5 × 5 × 20	DS M5
KSM01.2B-061	6 × 6 × 32	DS M6
KSM01.2B-071	10 × 8 × 45	DS M10
KSM01.2B-076	8 × 7 × 40	DS M8

Fig.5-19: Key and Centering Hole

5.2.4 Bearing Load and Shaft Load

See index entry "Project planning → Notes on mechanical project planning" for more detailed information on

- Allowed radial and axial forces
- Shaft load
- Bearings

Courtesy of CMA/Flodyne/Hydradyne ▪ Motion Control ▪ Hydraulic ▪ Pneumatic ▪ Electrical ▪ Mechanical ▪ (800) 426-5480 ▪ www.cmafh.com

Radial Force F_{radial}

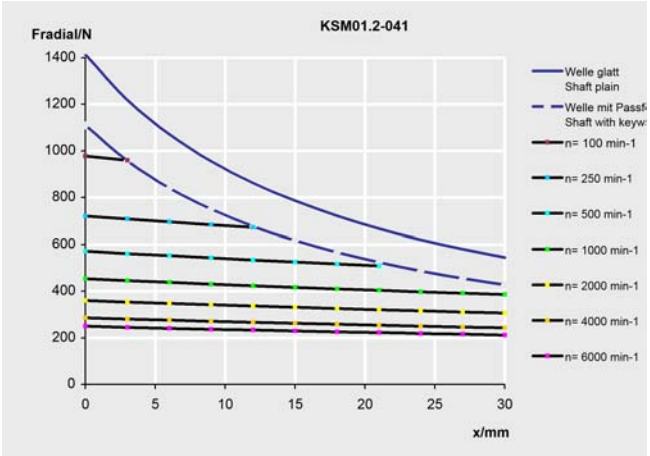

Fig.5-20: KSM01.2B-041: Allowed Radial Force (Shaft and Bearings Load)

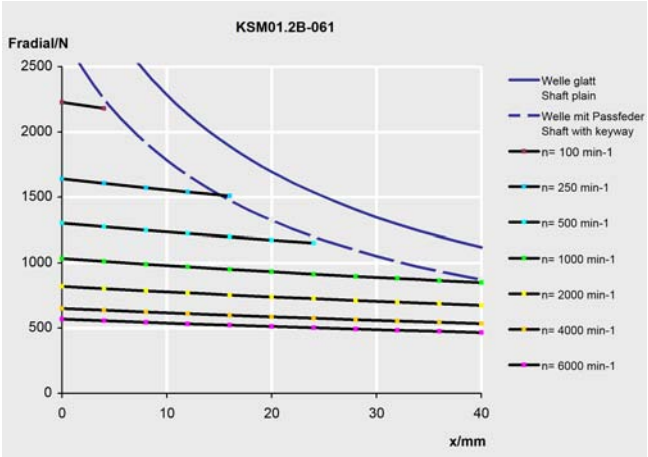

Fig.5-21: KSM01.2B-061: Allowed Radial Force (Shaft and Bearings Load)

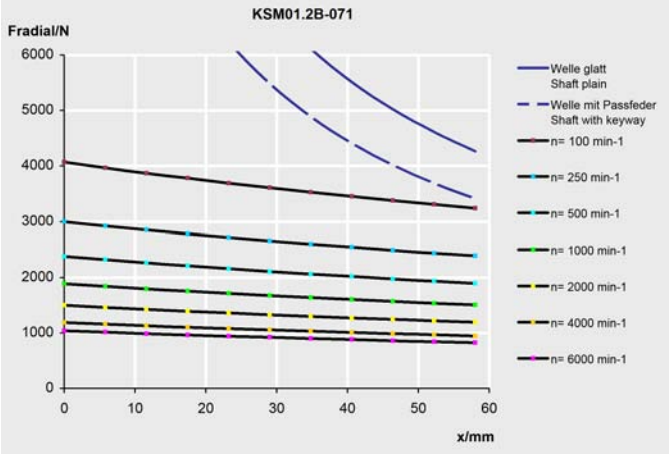

Fig.5-22: KSM01.2B-071: Allowed Radial Force (Shaft and Bearings Load)

Courtesy of CMA/Flodyne/Hydradyne ▪ Motion Control ▪ Hydraulic ▪ Pneumatic ▪ Electrical ▪ Mechanical ▪ (800) 426-5480 ▪ www.cmafh.com

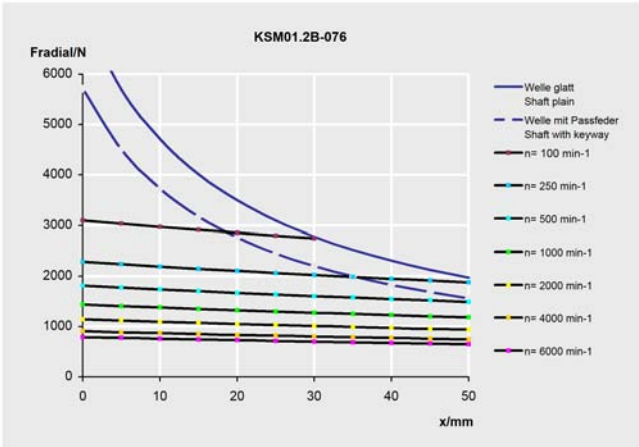

Fig.5-23: KSM01.2B-076: Allowed Radial Force (Shaft and Bearings Load)

Axial Force F_{axial}

Type	Maximum allowed axial force in [N]
KSM01.2B-041	20
KSM01.2B-061	20
KSM01.2B-071	40
KSM01.2B-076	40

Fig.5-24: Allowed Axial Force

5.3 Distributed Drive Controller KMS

5.3.1 Brief Description and Usage

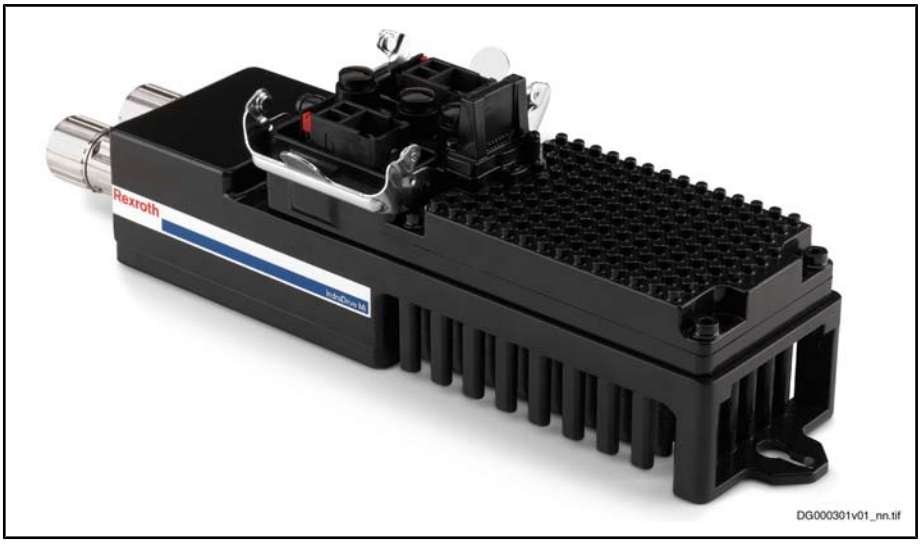

Fig.5-25: Distributed Drive Controller KMS

Distributed drive controllers KMS are used to operate Rexroth IndraDyn S motors.

5.3.2 Data Sheet KMS

Data Sheet KMS

Description	Symbol	Unit	KMS01.2B-A018
Listing according to UL standard (UL)			UL 508 C
Listing according to CSA standard (UL)			Canadian National Standard(s) C22.2 No. 14-05
UL files (UL)			E 134201
Ambient temperature range for operation with nominal data	T_{a_work}	°C	0...40
Degree of protection according to IEC60529			IP 65
Ambient conditions according to UL50/50E			4X (in preparation)
Mass	m	kg	2,40
Data control voltage			
Rated control voltage input (UL)[1)]	U_{N3}	V	DC 30...42
Rated power consumption control voltage input at U_{N3} (UL) [2)]	P_{N3}	W	16
Data power section			
Short circuit current rating (UL)	SCCR	A rms	42000
Rated input voltage, power (UL) [3)]	U_{LN_nenn}	V	DC 540...750
Capacitance in DC bus	C_{DC}	mF	0,02
Rated input current (UL)	I_{LN}	A	7,3
Maximum bypass current (UL)		A	25,0
Allowed switching frequencies [4)]	f_s	kHz	4, 8
Power dissipation at continuous current and continuous DC bus power respectively (UL)[5)]	P_{Diss_cont}	W	50,00
Data power section - Output			
Output voltage, fundamental wave with open-loop operation	U_{out_eff}	V	UDC * 0,71
Output voltage, fundamental wave with closed-loop operation	U_{out_eff}	V	UDC * 0,71
Rise of voltage at output with U_{LN_nenn} and 15 m motor cable length phase-phase (10-90%)[6)]	dv/dt	kV/µs	5,00
Rise of voltage at output with U_{LN_nenn} and 15 m motor cable length phase-ground (10-90%)[7)]	dv/dt	kV/µs	5,00
			Last modification: 2010-02-19

Courtesy of CMA/Flodyne/Hydradyne ▪ Motion Control ▪ Hydraulic ▪ Pneumatic ▪ Electrical ▪ Mechanical ▪ (800) 426-5480 ▪ www.cmafh.com

Courtesy of CMA/Flodyne/Hydradyne ▪ Motion Control ▪ Hydraulic ▪ Pneumatic ▪ Electrical ▪ Mechanical ▪ (800) 426-5480 ▪ www.cmafh.com

Technical Data of the Components

Description	Symbol	Unit	KMS01.2B-A018
Output frequency range at f_s = 4 kHz	f_{out_4k}	Hz	0...400
Output frequency range at f_s = 8 kHz	f_{out_8k}	Hz	0...800
Output frequency threshold to detect motor standstill[8)]	f_{out_still}	Hz	0...4
Maximum output current at f_s = 4 kHz	I_{out_max4}	A	17,7
Maximum output current at f_s = 8 kHz	I_{out_max8}	A	13,3
Continuous output current at f_s = 4 kHz	I_{out_cont4}	A	5,8
Continuous output current at f_s = 8 kHz	I_{out_cont8}	A	2,6
Continuous output current at f_s = 4 kHz; output frequency $f_{out} < f_{out_still}$	$I_{out_cont0Hz_4}$	A	5,6
Continuous output current at f_s = 8 kHz; output frequency $f_{out} < f_{out_still}$	$I_{out_cont0Hz_8}$	A	2,4
			Last modification: 2010-02-19

1) Observe supply voltage for motor holding brake
2) HMS, HMD, HCS plus motor holding brake and control section; HCS01 including control section
3) DC bus L+, L-; mains input L1, L2, L3
4) Also depending on firmware and control section; see parameter description "P-0-0001, Switching frequency of the power output stage"; see "P-0-4058, Amplifier type data"
5) Plus dissipation of braking resistor and control section
6) 7) Guide value, see following note
8) See following note regarding reduction output current

Fig.5-26: KMS - Technical Data

☞ **Guide value "Rise of voltage at output"**

Observe that the load at the motor is almost independent of the power section used.

Especially when using **standard motors**, make sure that they comply with the occurring voltage load.

Observe the information on third-party motors at drive controllers (see documentation "Rexroth IndraDrive, Drive Systems With HMV01/02 HMS01/02, HMD01, HCS02/03", index entry "Third-party motors → At drive controllers").

☞ **Reduced output current at motor standstill**

Depending on the electric output frequency, the output current is reduced for thermal protection of the power section.

The output current is reduced, when the electric output frequency has fallen below the threshold to detect motor standstill.

5.3.3 Dimensional Drawing KMS

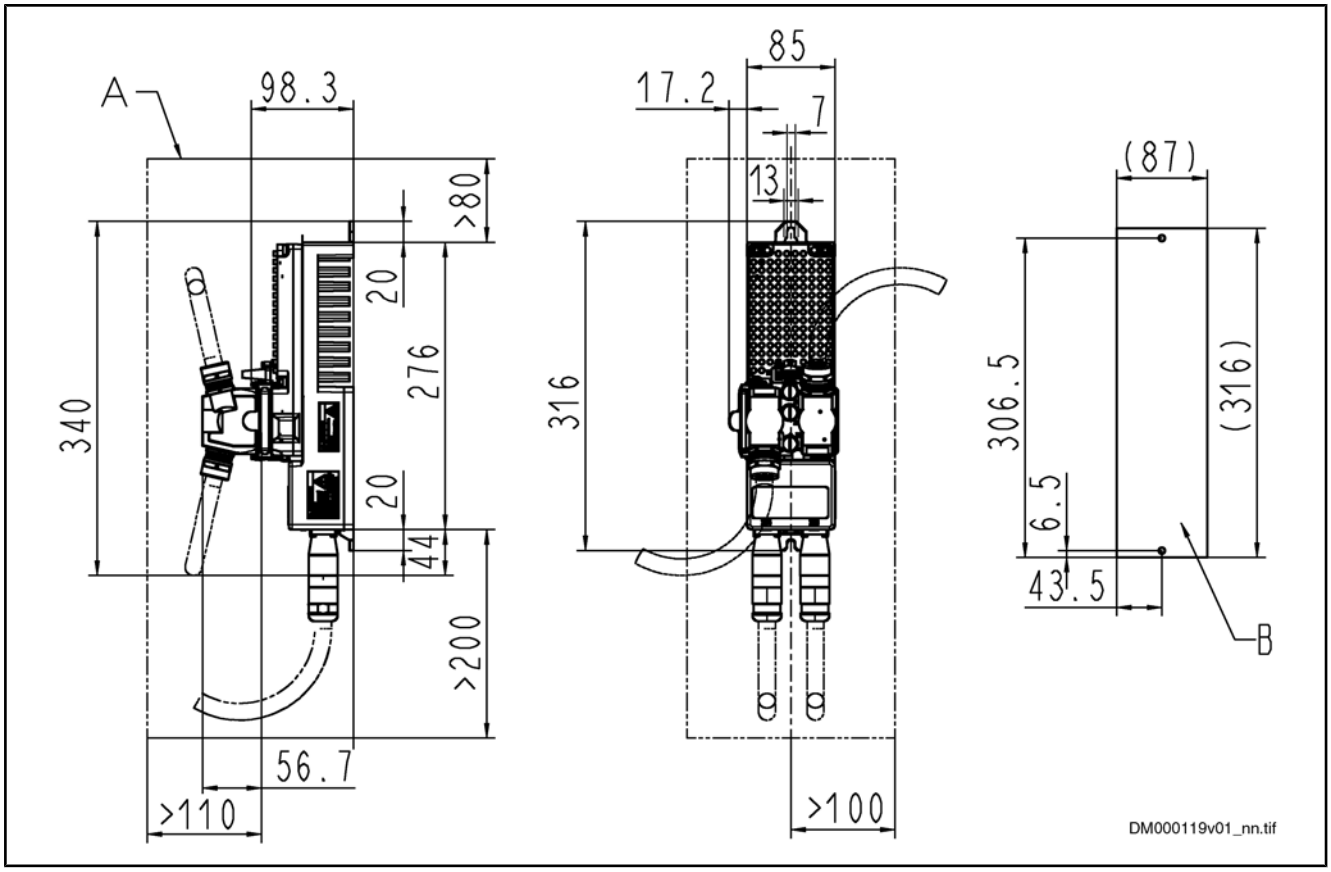

A	Minimum mounting clearance
B	Boring dimensions
Fig.5-27:	*Dimensions*

5.4 Electronic Control System KCU

5.4.1 Brief Description and Usage

The electronic control system KCU fulfills the following functions:

- Transmission of power supply of KSM/KMS
- Supply of KSM/KMS with control voltage
- Conversion from SERCOS (fiber optic cable) to RS422
- Exchange of status signals between KSM/KMS and supply unit

Courtesy of CMA/Flodyne/Hydradyne ▪ Motion Control ▪ Hydraulic ▪ Pneumatic ▪ Electrical ▪ Mechanical ▪ (800) 426-5480 ▪ www.cmafh.com

Courtesy of CMA/Flodyne/Hydradyne ▪ Motion Control ▪ Hydraulic ▪ Pneumatic ▪ Electrical ▪ Mechanical ▪ (800) 426-5480 ▪ www.cmafh.com

5.4.2 Data Sheet KCU

Data Sheet KCU - Currents, Voltages, Power

Description	Symbol	Unit	KCU01.2N-SE-SE*-025-NN-S-NN-NW
Listing according to UL standard (UL)			UL 508 C
Listing according to CSA standard (UL)			Canadian National Standard(s) C22.2 No. 14-05
UL files (UL)			E 134201
Mass	m	kg	3,80
Degree of protection according to IEC60529			IP20
Minimum distance on the top of the device[1)]	d_{top}	mm	80
Minimum distance on the bottom of the device[2)]	d_{bot}	mm	110
Horizontal spacing on the device[3)]	d_{hor}	mm	0
Temperature rise with minimum distances d_{bot}; d_{top}; P_{BD}	ΔT	K	<60
Cooling type			Forced
Volumetric capacity of forced cooling	V	m^3/h	Approx. 0.3
Power dissipation at continuous current and continuous DC bus power respectively (UL)[4)]	P_{Diss_cont}	W	90
Insulation resistance at DC 500 V	R_{is}	Mohm	>50
Average sound pressure level (accuracy class 2) at P_{DC_cont}[5)]	L_P	dB (A)	<70
Data control voltage - Input			
Rated control voltage input (UL)[6)]	U_{N3}	V	24 ± 20 %
Rated power consumption control voltage input at U_{N3} (UL) [7)]	P_{N3}	W	675
Maximum inrush current at 24V supply	I_{EIN3_max}	A	8,00
Pulse width of I_{EIN3}	$t_{EIN3Lade}$	ms	<1000
Input capacitance	C_{N3}	mF	5,00
Maximum allowed voltage for 1 ms	U_{N3_max}	V	33,00
Data control voltage - Output			
Rated control voltage output (UL)	U_{out}	V	42,0
Rated control power output (UL)	P_{out}	W	588,0
			Last modification: 2010-02-19

Courtesy of CMA/Flodyne/Hydradyne ▪ Motion Control ▪ Hydraulic ▪ Pneumatic ▪ Electrical ▪ Mechanical ▪ (800) 426-5480 ▪ www.cmafh.com

Description	Symbol	Unit	KCU01.2N-SE-SE*-025-NN-S-NN-NW
Data power section - Input			
Rated input voltage, power (UL) [8]	U_{LN_nenn}	V	DC 540...750
Rated input current (UL)	I_{LN}	A	25,0
Capacitance in DC bus	C_{DC}	mF	< 0,001
Capacitance against housing	C_Y	nF	2 x 470
Short circuit current rating (UL)	SCCR	A rms	42000
Data power section - Output			
Output voltage (UL)	U_{out}	V	DC 540...750
Output current (UL)	I_{out}	A	25,0
Derating of P_{DC_cont}; P_{BD}; I_{out_cont} at $T_{a_work} < T_a < T_{a_work_red}$	f_{Ta}	%/K	2
Rated power (t > 10 min) at f_s = 4 kHz; U_{LN_nenn}; control factor a_0 > 0.8; without mains choke	P_{DC_cont}	kW	14,0...18,8
Maximum allowed DC bus power at U_{LN_nenn}; without mains choke	P_{DC_max}	kW	42,0...53,3
			Last modification: 2010-02-19

1) 2) 3) See fig. "Air Intake and Air Outlet at Device"
4) Plus dissipation of braking resistor and control section
5) According to DIN EN ISO 11205; comparative value at distance 1 m, out of cabinet; HCS types with order code -L***: load-dependent
6) Observe supply voltage for motor holding brake
7) HMS, HMD, HCS plus motor holding brake and control section; HCS01 including control section
8) DC bus L+, L-; mains input L1, L2, L3

Fig.5-28: KCU - Technical Data

NOTICE **Property damage due to temperatures higher than 105 °C!**

Comply with indicated minimum distances!

Courtesy of CMA/Flodyne/Hydradyne ▪ Motion Control ▪ Hydraulic ▪ Pneumatic ▪ Electrical ▪ Mechanical ▪ (800) 426-5480 ▪ www.cmafh.com

Technical Data of the Components

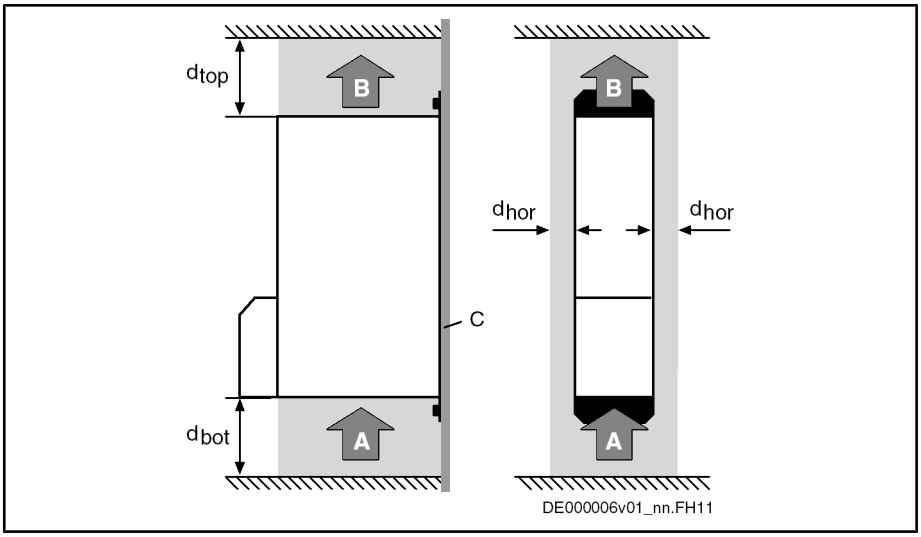

A	Air intake
B	Air outlet
C	Mounting surface in control cabinet
d_{top}	Distance top
d_{bot}	Distance bottom
d_{hor}	Distance horizontal

Fig.5-29: Air Intake and Air Outlet at Device

5.4.3 Dimensional Drawing KCU

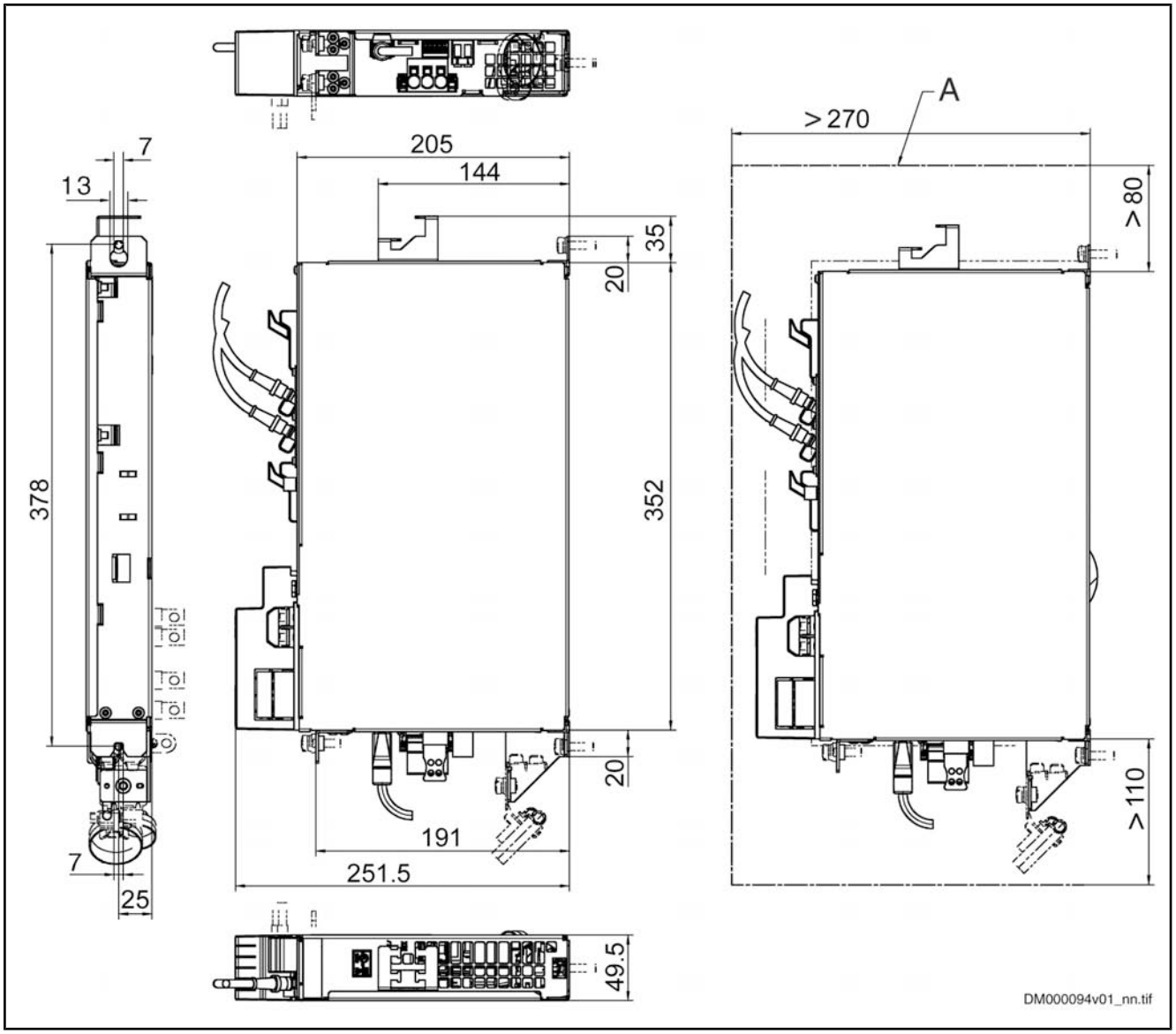

A Minimum mounting clearance
Fig.5-30: Dimensions

5.5 Hybrid Cable RKH

5.5.1 Technical Data

Description	Unit	Ready-made hybrid cables RKH
Brief description of cable		[5 × 2.5 mm² + 5 × 0.34 mm² + (2 × 2 × 0.34 mm²) C] StC
Current carrying capacity	A	2 × 25 A; 2 × 15 A
Temperature range during storage	°C	-30 °C to +60 °C
Ambient temperature during operation and with permanent installation	°C	-30 °C to +40 °C
Ambient temperature during operation and with flexible installation	°C	-20 °C to +40 °C

Courtesy of CMA/Flodyne/Hydradyne ▪ Motion Control ▪ Hydraulic ▪ Pneumatic ▪ Electrical ▪ Mechanical ▪ (800) 426-5480 ▪ www.cmafh.com

Courtesy of CMA/Flodyne/Hydradyne ▪ Motion Control ▪ Hydraulic ▪ Pneumatic ▪ Electrical ▪ Mechanical ▪ (800) 426-5480 ▪ www.cmafh.com

Technical Data of the Components

Description	Unit	Ready-made hybrid cables RKH
Material of cable jacket		PUR
Approvals		UL/CSA
Silicone, halogens		Not containing any silicones or halogens
Oil resistance		According to DIN EN 60 811-2-1 and HD 22.10 appendix A, DIN 282 part 10
Flammability		According to DIN EN 50 265-2-1, IEC60332-1, UL Sub.758 AWM Section G Page 95
Diameter (AD)	mm	16,2 ±0,5
Bending radius with permanent installation		5 × AD
Bending radius with flexible installation		10 × AD
Number of bending cycles		5 million
Specific cable weight	kg/m	0,35
Suited for use in flexible cable tracks		Yes

Fig.5-31: Technical Data Hybrid Cables RKH

5.6 Selecting Hybrid Cable for Appropriate Connection

Hybrid cable RKH (with different outgoing directions from connection point X3.1 or X3.2 at KSM and KMS)		KCU	X3.1	X3.1	X3.1	X3.2	X3.2	X3.2	RKH0700
	KCU	-	-	-	-	RKH0301	RKH0401	RKH0501	RKH0501
	X3.1	-	RKH0001	RKH0100	RKH0202	-	-	-	RKH0202
	X3.1	-	RKH0100	RKH0200	RKH0204	-	-	-	RKH0204
	X3.1	-	RKH0202	RKH0204	RKH0600	-	-	-	RKH0600

Hybrid cable RKH (with different outgoing directions from connection point X3.1 or X3.2 at KSM and KMS)		KCU	X3.1	X3.1	X3.1	X3.2	X3.2	X3.2	RKH0700
	X3.2	RKH0301	-	-	-	RKH0002	RKH0101	RKH0203	RKH0203
	X3.2	RKH0401	-	-	-	RKH0101	RKH0201	RKH0205	RKH0205
	X3.2	RKH0501	-	-	-	RKH0203	RKH0205	RKH0601	RKH0601
	RKH0700	RKH0501	RKH0202	RKH0204	RKH0600	RKH0203	RKH0205	RKH0601	-

Fig.5-32: Hybrid Cable RKH

Courtesy of CMA/Flodyne/Hydradyne ▪ Motion Control ▪ Hydraulic ▪ Pneumatic ▪ Electrical ▪ Mechanical ▪ (800) 426-5480 ▪ www.cmafh.com

Courtesy of CMA/Flodyne/Hydradyne ▪ Motion Control ▪ Hydraulic ▪ Pneumatic ▪ Electrical ▪ Mechanical ▪ (800) 426-5480 ▪ www.cmafh.com

Technical Data of the Components

Selection of Hybrid Cables

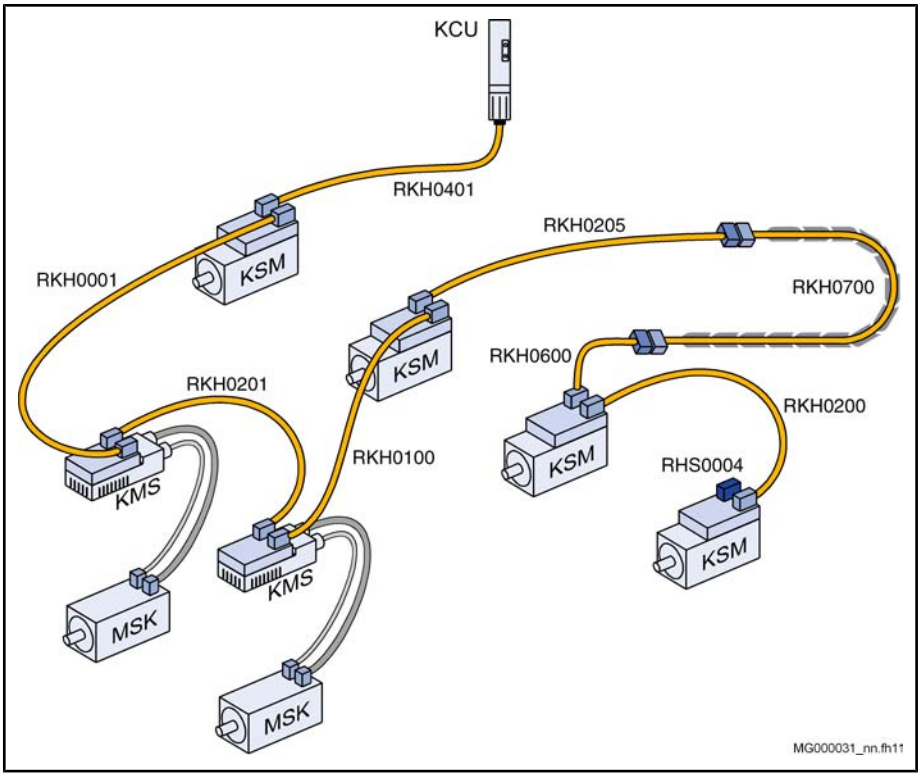

Fig.5-33: Example of Drive System With Hybrid Cable

Each string of distributed servo drives KSM must be terminated with the terminal connector RHS0004.

All hybrid cables are suited for use in flexible cable tracks. In the example, the cable RKH0700 is used in a flexible cable track. To quickly replace the flexible cable track cable for servicing, the cable in the example used in the flexible cable track has been equipped with connectors at the inputs. Observe the maximum allowed length of the hybrid cable in the flexible cable track.

Identifying the Hybrid Cables

Hybrid cables are marked according to the following example:

RKH0100/030,5

The cable designation is made up of:

Cable number ⇒ e.g. **RKH0100**

and

Cable length ⇒ e.g. **30.5 m**

Terminal Connector

Each string of distributed servo drives KSM must be terminated with the terminal connector.

	KSM X3.1 / X3.2
Terminal connector	RHS0004

Fig.5-34: Order Code of Terminal Connector

5.7 Interconnection Diagrams for Ready-Made Hybrid Cables

Connector Pin Assignment Hybrid Cable (Between KCU and First KSM/KMS)

Applies to: RKH0301, RKH0401, RKH0501

Plug-in connector KCU	Bulk cable	Plug-in connector KSM/ KMS
RHS0005/C03	REH0800	RHS0001/C03 1) RHS0006/C03 2)

Interconnection diagram

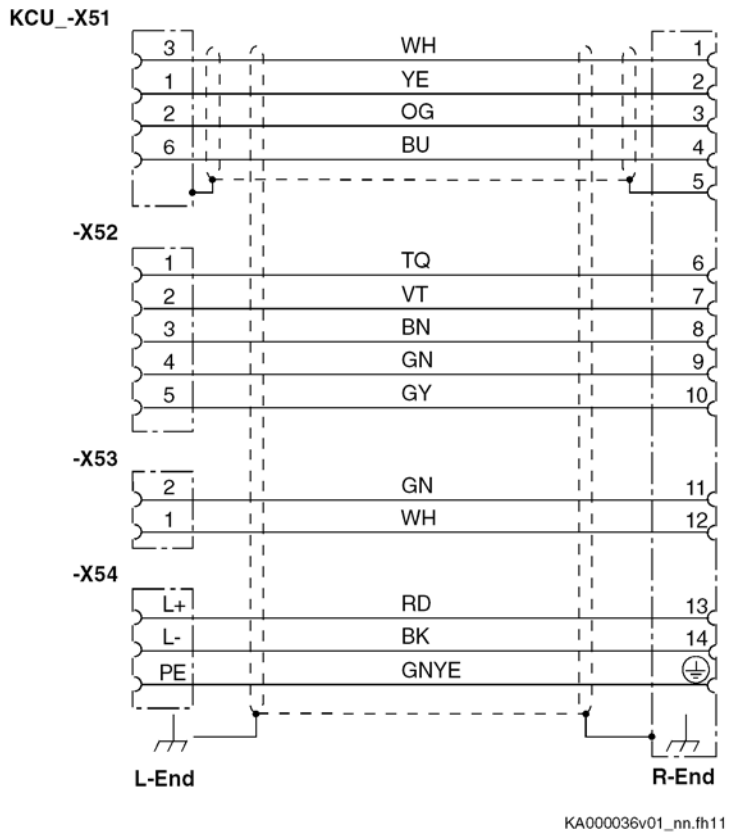

Coding at plug-in connector KSM/KMS 3)

Cable type	L-End	R-End
RKH0301 RKH0401 RKH0501	Not coded	

1) Plug-in connector R-End for RKH0310, RKH0401
2) Plug-in connector R-End for RKH0501
3) Picture shows coding with view to mating side

Fig.5-35: Parts of Ready-Made Hybrid Cables From KCU to KSM/KMS

Connector Pin Assignment Hybrid Cable (Between two KSM/KMS)

Courtesy of CMA/Flodyne/Hydradyne ▪ Motion Control ▪ Hydraulic ▪ Pneumatic ▪ Electrical ▪ Mechanical ▪ (800) 426-5480 ▪ www.cmafh.com

Courtesy of CMA/Flodyne/Hydradyne ▪ Motion Control ▪ Hydraulic ▪ Pneumatic ▪ Electrical ▪ Mechanical ▪ (800) 426-5480 ▪ www.cmafh.com

Technical Data of the Components

Applies to: RKH0001, RKH0002, RKH0100, RKH0200, RKH0101, RKH0201, RKH0202, RKH0203, RKH0204, RKH0205, RKH0600, RKH0601

Plug-in connector KSM/ KMS	Bulk cable	Plug-in connector KSM/ KMS
RHS0001/C03 RHS0006/C03	REH0800	RHS0001/C03 RHS0006/C03

Interconnection diagram

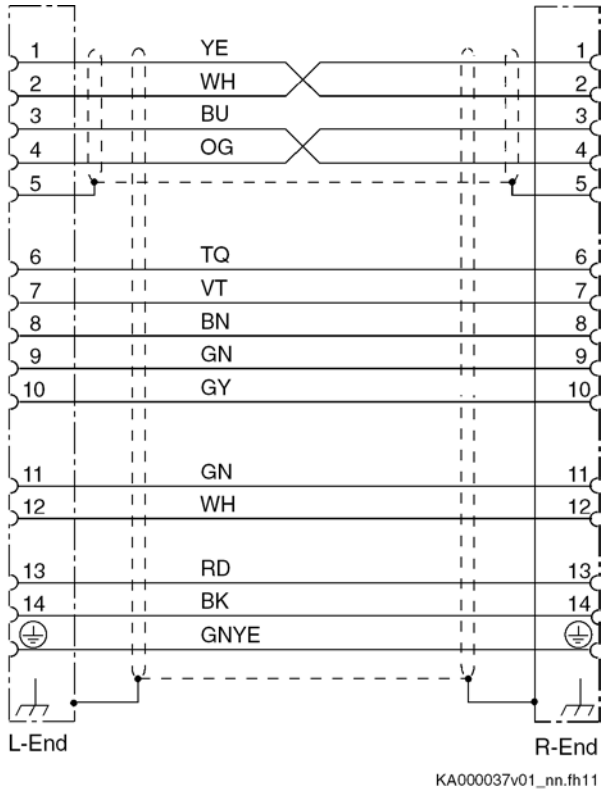

Coding at plug-in connector KSM/KMS [1)]

Cable type	L-End	R-End

Courtesy of CMA/Flodyne/Hydradyne ▪ Motion Control ▪ Hydraulic ▪ Pneumatic ▪ Electrical ▪ Mechanical ▪ (800) 426-5480 ▪ www.cmafh.com

Plug-in connector KSM/ KMS	Bulk cable	Plug-in connector KSM/ KMS
RHS0001/C03 RHS0006/C03	REH0800	RHS0001/C03 RHS0006/C03
RKH0001 RKH0100 RKH0200 RKH0202 RKH0204 RKH0600		
RKH0002 RKH0101 RKH0201 RKH0203 RKH0205 RKH0601		

1) Picture shows coding with view to mating side

Fig.5-36: Parts of Ready-Made Hybrid Cables From KSM/KMS to KSM/KMS

Courtesy of CMA/Flodyne/Hydradyne ▪ Motion Control ▪ Hydraulic ▪ Pneumatic ▪ Electrical ▪ Mechanical ▪ (800) 426-5480 ▪ www.cmafh.com

Technical Data of the Components

Connector Pin Assignment Hybrid Cable (for Flexible Cable Tracks)

Applies to: RKH0700

Plug-in connector KSM/ KMS	Bulk cable	Plug-in connector KSM/ KMS
RHS0007/C03	REH0800	RHS0007/C03

Interconnection diagram

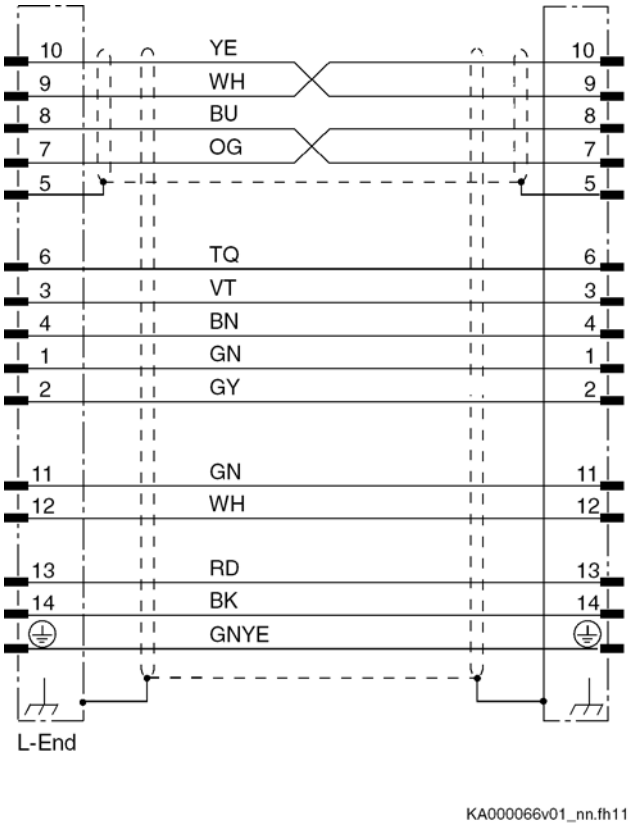

Coding at plug-in connector KSM/KMS

Cable type	L-End	R-End
RKH0700	Not coded	Not coded

Fig.5-37: Parts of Ready-Made Hybrid Cable for Flexible Cable Tracks

Connector Pin Assignment Terminal Connector

At the last KSM, the terminal connector is plugged in the unassigned connection (X3.1 or X3.2). It has two functions:

- It closes the SERCOS ring

  and

- contains the pull-up resistor for power enable Bb_V of the supply unit (power off when a connector is removed).

Courtesy of CMA/Flodyne/Hydradyne ▪ Motion Control ▪ Hydraulic ▪ Pneumatic ▪ Electrical ▪ Mechanical ▪ (800) 426-5480 ▪ www.cmafh.com

Applies to: RHS0004

Terminal connector
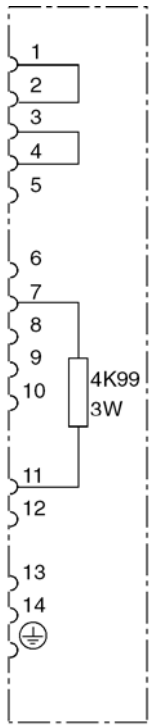
Coding at plug-in connector
RHS0004 not coded

Fig.5-38: Parts of Ready-Made Terminal Connector RHS

Courtesy of CMA/Flodyne/Hydradyne ▪ Motion Control ▪ Hydraulic ▪ Pneumatic ▪ Electrical ▪ Mechanical ▪ (800) 426-5480 ▪ www.cmafh.com

6 Connection Points

6.1 Connection Points of System

6.1.1 Connection Point of Equipment Grounding Conductor

⚠ WARNING **Dangerous contact voltage at device housing! Lethal electric shock!**

The devices of the Rexroth IndraDrive Mi product range are devices with increased leakage current (greater than AC 3.5 mA or DC 10 mA).

Therefore, always install a stationary connection of the equipment grounding conductor.

In a Rexroth IndraDrive Mi drive system, connect the equipment grounding conductor connections of all devices and additional components to the equipment grounding system.

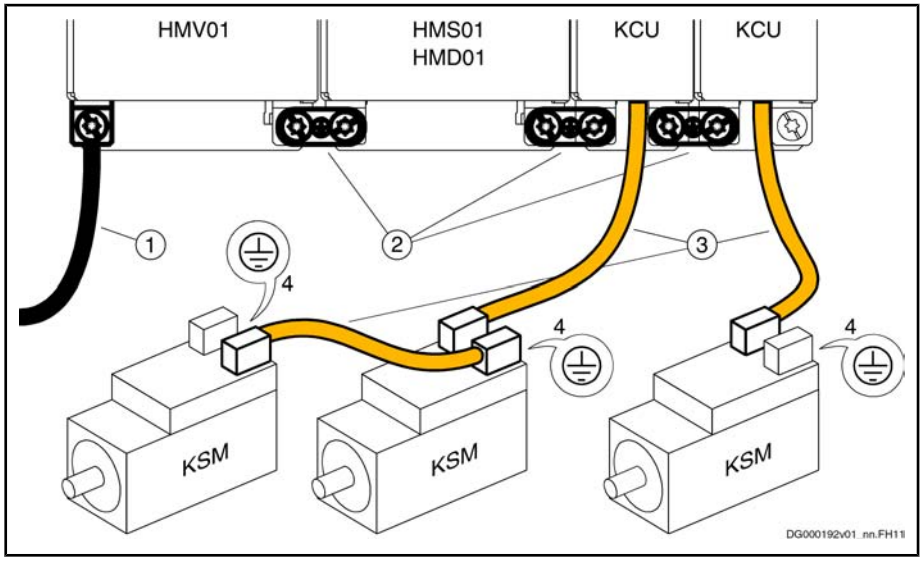

1 Connection point of equipment grounding conductor at supply unit with connection to equipment grounding system

2 Joint bars connect equipment grounding conductors of neighboring devices

3 Hybrid cables connect equipment grounding conductors of KSM/KMS with one another and with equipment grounding conductor of KCU

4 Second connection point of equipment grounding conductor (see index entry "Connection → Second connection point of equipment grounding conductor")

Fig.6-1: Connection Point of Equipment Grounding Conductor

☞ The connection point of the equipment grounding conductor shown above applies to distributed drive controllers KMS, too.

Courtesy of CMA/Flodyne/Hydradyne ▪ Motion Control ▪ Hydraulic ▪ Pneumatic ▪ Electrical ▪ Mechanical ▪ (800) 426-5480 ▪ www.cmafh.com

Courtesy of CMA/Flodyne/Hydradyne ▪ Motion Control ▪ Hydraulic ▪ Pneumatic ▪ Electrical ▪ Mechanical ▪ (800) 426-5480 ▪ www.cmafh.com

6.1.2 Ground Connection

NOTICE **Risk of damage to the devices by spark discharge of static charges**

In some applications (e.g. printing or packaging), high static charges can develop. Make sure that these charges can be directly discharged against ground at their point of origin. Therefore, connect the second connection point of equipment grounding conductor at KSM/KMS to the equipment grounding system of the installation.

The ground connection of the housing is used to provide functional safety of the devices and protection against contact in conjunction with the equipment grounding conductor.

Ground the housings of the devices:

1. Connect the bare metal back panel of the devices in conductive form to the mounting surface in the control cabinet. To do this, use the supplied mounting screws.
2. Connect the mounting surface of the control cabinet in conductive form to the equipment grounding system.

6.2 Connection Points of KCU

6.2.1 Position of Connection Points

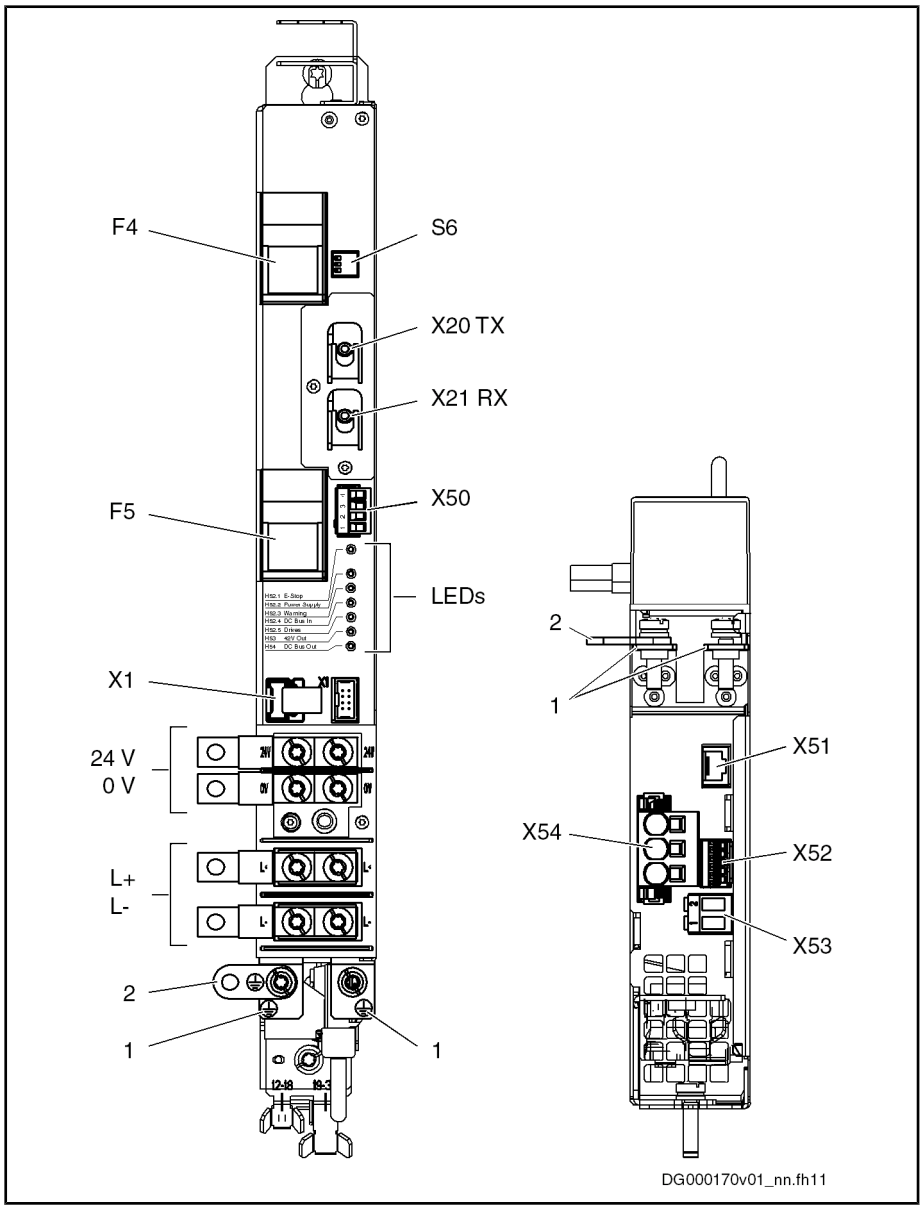

Fig.6-2: Electronic Control System KCU (Left: Front, Right: Bottom)

Element	Significance	Notes
1	Connection point equipment grounding conductor	For connection to the equipment grounding system
2	Joint bar equipment grounding conductor	For connection to neighboring device (part of basic accessory HAS01)
F4	Fuse output X54 (L+)	30 A
F5	Fuse output X54 (L-)	30 A

Courtesy of CMA/Flodyne/Hydradyne ▪ Motion Control ▪ Hydraulic ▪ Pneumatic ▪ Electrical ▪ Mechanical ▪ (800) 426-5480 ▪ www.cmafh.com

Courtesy of CMA/Flodyne/Hydradyne ▪ Motion Control ▪ Hydraulic ▪ Pneumatic ▪ Electrical ▪ Mechanical ▪ (800) 426-5480 ▪ www.cmafh.com

Connection Points

Element	Significance	Notes
LEDs	H52.1: E-Stop	See index entry "KCU → LEDs"
	H52.2: Power Supply	
	H52.3: Warning	
	H52.4: DC Bus In	
	H52.5: Drives	
	H53: 42 V Out	
	H54: DC Bus Out	
24 V, 0 V	Control voltage connection	For connection to supply unit via contact bars (part of basic accessory HAS01)
L+, L-	DC bus connection	For connection to supply unit via contact bars (part of basic accessory HAS01)
S6	Switch	For setting the SERCOS transmission power
X1	Module bus connection	Keep ribbon cable in parking position, when there is no connection to neighboring device.
X20 TX	SERCOS connection	Transmitter
X21 RX	SERCOS connection	Receiver
X50	E-Stop connection	E-Stop input
X51	SERCOS connection	Master communication
X52	Status messages connection	For exchanging status messages
X53	42 V, 0 V connection	42 V output; control voltage supply
X54	Connection for DC bus, equipment grounding conductor	DC bus output; power supply

Fig.6-3: Connection Points and Display Elements

☞ For the correct and safe function of the drive, **all** connection points must be connected.

At X51, X52, X53 and X54, use the hybrid cable RKH by Rexroth.

6.2.2 X1, Module Bus

Function, Pin Assignment

The module bus is an **internal system connection** and is used to exchange data between the devices.

Courtesy of CMA/Flodyne/Hydradyne ▪ Motion Control ▪ Hydraulic ▪ Pneumatic ▪ Electrical ▪ Mechanical ▪ (800) 426-5480 ▪ www.cmafh.com

View	Identification	Function
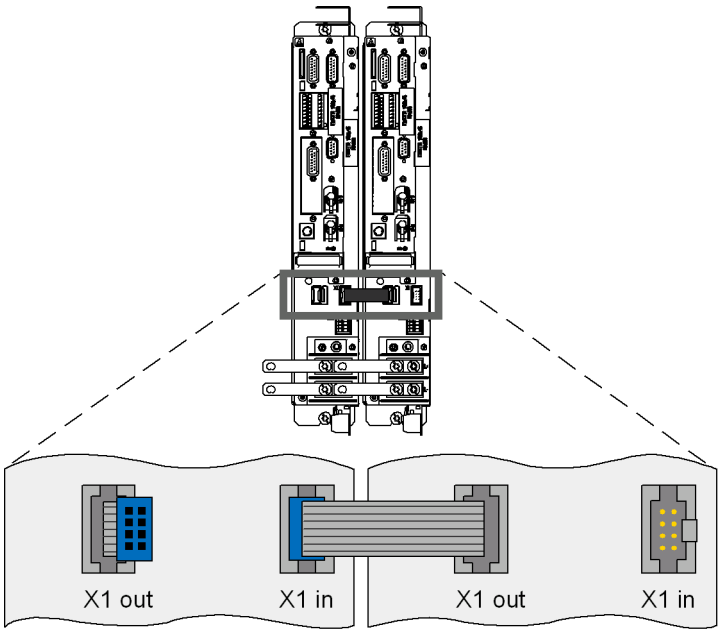	X1 in	To plug in module bus connector
	X1 out	Passes module bus connection to neighboring device

Fig.6-4: X1, Module Bus

Notes on Installation

Keep ribbon cable in parking position, when not connected to neighboring device.

☞ When using DC bus capacitor units: Do not establish this connection at the DC bus capacitor unit, if the DC bus capacitor unit is the last device in the drive system.

6.2.3 X20 TX, X21 RX (SERCOS interface)

General Information

NOTICE **Risk of damage to the connection by too high tightening torque!**

The **maximum tightening torque** of the union nut at the coupling elements of the fiber optic cables is **0.6 Nm**.

Description

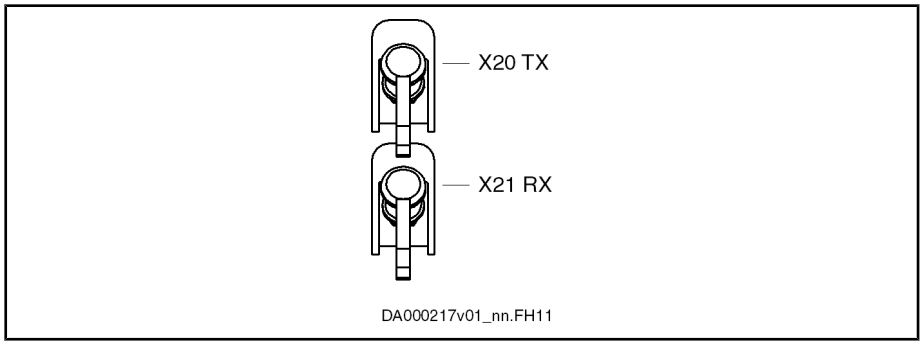

Fig.6-5: SERCOS interface

Courtesy of CMA/Flodyne/Hydradyne ▪ Motion Control ▪ Hydraulic ▪ Pneumatic ▪ Electrical ▪ Mechanical ▪ (800) 426-5480 ▪ www.cmafh.com

Connection Points

Pin Assignment

X20	TX	Transmitter
X21	RX	Receiver

S6, SERCOS Transmission Power

View	S6/1	S6/2	S6/3	Fiber optic cable length	Transmission power
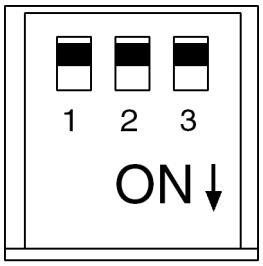	-	OFF	OFF	0 … 15 m	-14.0 to -8.0 dBm
	-	ON	OFF	15 … 30 m	-9.0 to -3.0 dBm
	-	OFF	ON	30 … 45 m	-7.3 to -1.3 dBm
	-	ON	ON	> 45 m or glass fiber	-5.5 to +0.5 dBm

Fig.6-6: Switch for Setting the SERCOS Fiber Optic Cable Transmission Power

6.2.4 X50, E-Stop Input

Complies with EN61131-2

View	Connection	Signal name	Function
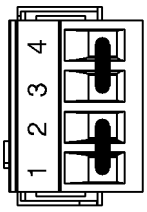 Condition as supplied: With jumpers at 1-2 and 3-4	4	24V	24V output for E-Stop input
	3	$\overline{\text{E_Stop}}$	Digital input for E-Stop, isolated; active with input voltage "L"
	2	0V	
	1	0V	0V output for E-Stop input

Input circuit (R1 = approx. 2k5; R2 = approx. 20k; C1 = approx. 1 nF; V1 = approx. 5 V; V2 = approx. 0.7 V):

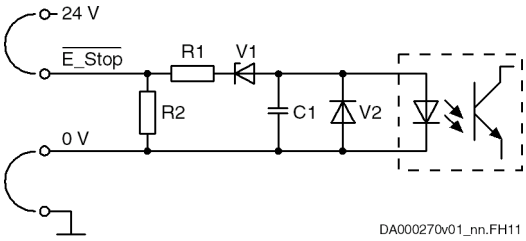

Spring terminal (connector)	Unit	Min.	Max.
Connection cable stranded wire	mm^2	0,5	1,5
Connection cable	AWG	20	16
Allowed input voltage	V	-3	30
Input voltage "H"	V	11	n.s.

Input voltage "L"	V	n.s.	5
Input resistance	kΩ	2,5	

Fig.6-7: Function, Pin Assignment, Properties

6.2.5 X51, Master Communication SERCOS

View	Connection	Signal name	Function
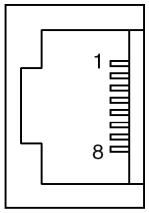 DA000041v01_nn.FH **RJ45, female**	1	RxD+	Internal interface
	2	RxD-	
	3	TxD+	
	4	n. c.	
	5	n. c.	
	6	TxD-	
	7	n. c.	
	8	n. c.	

Fig.6-8: Function, Pin Assignment, Properties

6.2.6 X52, Status Messages

KSM/KMS have no module bus connection. Connection to the overall system takes place via the electronic control system KCU.

View	Connection	Signal name	Function
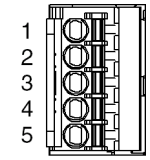 DA000036_nn.FH11	1	_____ E-Stop	Internal signals between KCU and KSM/KMS
	2	Bb_V	
	3	_____ Warn	
	4	Ud	
	5	Bb_A	
Spring terminal (connector at hybrid cable)	**Unit**	**Min.**	**Max.**
Connection cable stranded wire	mm^2	n.s.	
Connection cable	AWG		
Voltage range	V	0	42 +10%
Voltage level "H"	V	20	n.s.
Voltage level "L"	V	n.s.	10
Output current	mA	n.s.	1

Fig.6-9: Function, Pin Assignment, Properties

Courtesy of CMA/Flodyne/Hydradyne ▪ Motion Control ▪ Hydraulic ▪ Pneumatic ▪ Electrical ▪ Mechanical ▪ (800) 426-5480 ▪ www.cmafh.com

Courtesy of CMA/Flodyne/Hydradyne ▪ Motion Control ▪ Hydraulic ▪ Pneumatic ▪ Electrical ▪ Mechanical ▪ (800) 426-5480 ▪ www.cmafh.com

Connection Points

6.2.7 X53, Control Voltage Output

View	Connection	Signal name	Function
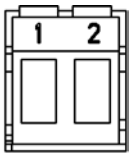 DA000178v01_nn.FH11	1	0 V	Output of DC-DC converter (24 V–42 V) in KCU; supplies KSM with control voltage
	2	42 V	
Screw terminal (connector at hybrid cable)	**Unit**	**Min.**	**Max.**
Tightening torque	Nm	1,5	1,7
Connection cable stranded wire	mm^2	Connection via hybrid cable RKH	
Connection cable	AWG		
Output data		U_{out}, P_{out} (see technical data of KCU)	
Short circuit protection		–	Present
Overload protection		–	Present

Fig.6-10: Function, Pin Assignment, Properties

6.2.8 X54, DC Bus, Equipment Grounding Conductor Output KSM/KMS

View	Connection	Function
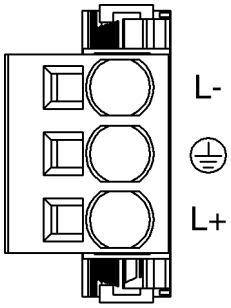 DG000185v01_nn.FH11	L-	DC bus; negative pole
	⏚	Equipment grounding conductor
	L+	DC bus; positive pole
Spring terminal (connector at hybrid cable)	**Unit**	**Min.**	**Max.**
Connection cable stranded wire	mm^2	Connection via hybrid cable RKH	
Connection cable	AWG		
Short circuit protection L+, L-		Fuses F4, F5	
Voltage L+, L-	V	U_{out} (see technical data of KCU)	

Fig.6-11: Function, Pin Assignment, Properties

6.2.9 DC Bus Connection L+, L-

⚠ WARNING **Lethal electric shock caused by live parts with more than 50 V!**

Before working on live parts: De-energize the installation and secure the power switch against unintentional or unauthorized re-energization.

Wait at least **30 minutes** after switching off the supply voltages to allow discharging. To shorten the waiting time until voltage has fallen below 50 V, you can use a discharging device (see chapter "Appendix").

Check whether voltages have fallen below 50 V before touching live parts!

Technical Data of the Connection Point

View	Identification	Function	
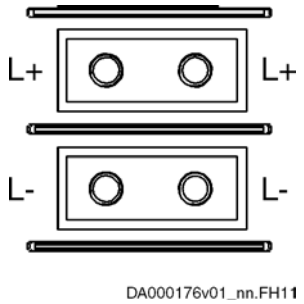	L+ L-	Connection points for connecting DC bus connections	
Screw connection M6 thread at device (terminal block)	**Unit**	**Min.**	**Max.**
Tightening torque	Nm	5,5	6,5
Short circuit protection		Via fusing elements connected in the incoming circuit to the mains connection	
Overload protection		Via fusing elements connected in the incoming circuit to the mains connection	
Current carrying capacity "looping through" from L+ to L+, L- to L- (contact bars in scope of supply of accessory HAS01)			
With contact bars -072	A		220
Additionally with contact bars -042 and end piece	A		245

Fig.6-12: Function, Pin Assignment, Properties

Courtesy of CMA/Flodyne/Hydradyne ▪ Motion Control ▪ Hydraulic ▪ Pneumatic ▪ Electrical ▪ Mechanical ▪ (800) 426-5480 ▪ www.cmafh.com

Courtesy of CMA/Flodyne/Hydradyne ▪ Motion Control ▪ Hydraulic ▪ Pneumatic ▪ Electrical ▪ Mechanical ▪ (800) 426-5480 ▪ www.cmafh.com

Connection Points

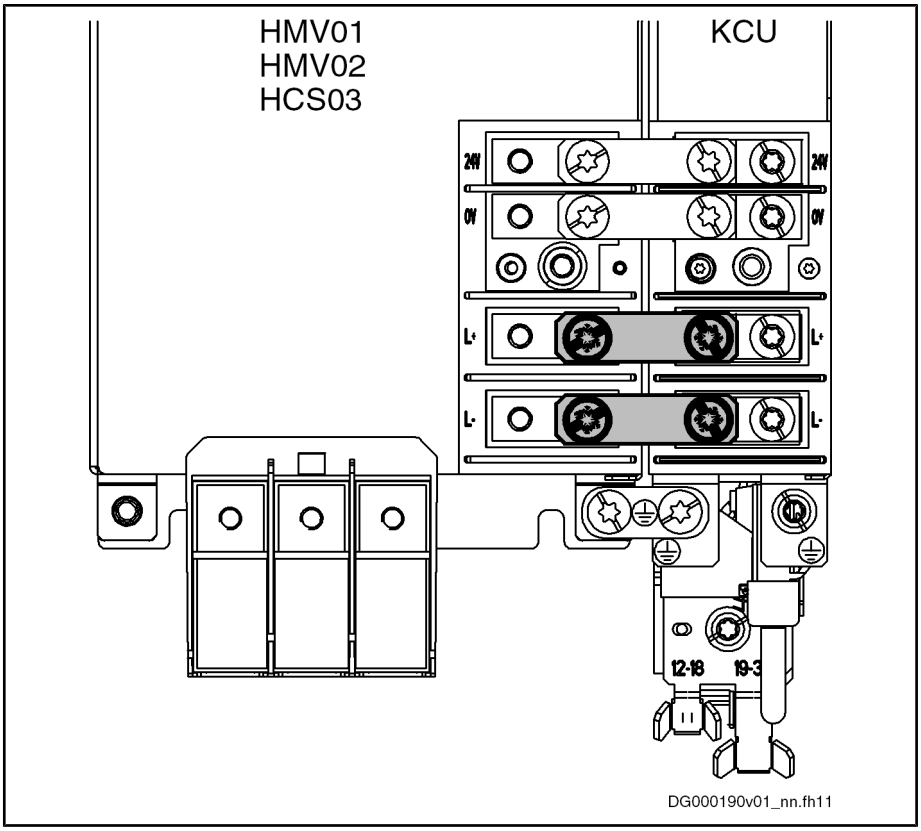

Fig.6-13: Connection of Contact Bars

Notes on Installation

If in special cases it is not possible to use the contact bars provided to establish the connection, the connection must be established using the shortest possible **twisted** wires.

NOTICE	**Risk of damage by voltage arcing!**

Insulate ring terminals and lines with a heat-shrinkable sleeve. Afterwards, only strip the insulation of the contact surface of the ring terminal.

When connecting the lines, make sure the polarity is correct.

Length of twisted wire	Max. 2 m
Line cross section	Min. 10 mm^2, but not smaller than cross section of supply feeder
Line protection	By means of fuses in the mains connection
Dielectric strength of single strand against ground	≥ 750 V (e.g.: strand type – H07)

Fig.6-14: DC Bus Line

Adjusting Mounting Depths

HMV01 and HCS03 devices have greater mounting depths than the electronic control system KCU. For connecting the electronic control system KCU to an HMV01 or HCS03 device, you must therefore use the control cabinet adapter **HAS03.1-002** which compensates the different mounting depths (see also chapter "Accessories").

6.2.10 Control Voltage Supply +24V, 0V

PELV[1] for 24V power supply unit

For the 24V supply of the devices of the Rexroth IndraDrive Mi range, use a power supply unit or a control-power transformer with protection by PELV according to IEC 60204-1 (section 6.4).

In the scope of CSA/UL, the data of the control-power transformer are limited to:

- Max. output voltage: 42.4 V_{peak} or 30 V_{ac}
- Max. output power: 10000 VA

Technical Data of the Connection Point

View	Identification	Function
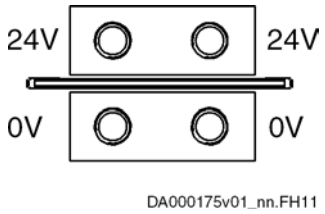	+24V	Power supply Connection to neighboring devices with contact bars from accessory HAS01.1
	0V	Reference potential for power supply Connection to neighboring devices with contact bars from accessory HAS01.1

Screw connection M6 thread at device (terminal block)	**Unit**	**Min.**	**Max.**
Tightening torque	Nm	5,5	6,5
Power consumption	W	P_{N3} (see technical data)	
Voltage load capacity	V	U_{N3} (see technical data)	
Polarity reversal protection		Within the allowed voltage range by internal protective diode	
Current carrying capacity "looping through" from 24V to 24V, 0V to 0V (contact bars in scope of supply of accessory HAS01)			
With contact bars -072	A	220	

Fig.6-15: Function, Pin Assignment, Properties

1) Protective Extra Low Voltage

Courtesy of CMA/Flodyne/Hydradyne ▪ Motion Control ▪ Hydraulic ▪ Pneumatic ▪ Electrical ▪ Mechanical ▪ (800) 426-5480 ▪ www.cmafh.com

Courtesy of CMA/Flodyne/Hydradyne ▪ Motion Control ▪ Hydraulic ▪ Pneumatic ▪ Electrical ▪ Mechanical ▪ (800) 426-5480 ▪ www.cmafh.com

Connection Points

HCS02	HCS03, HMV01, HMV02
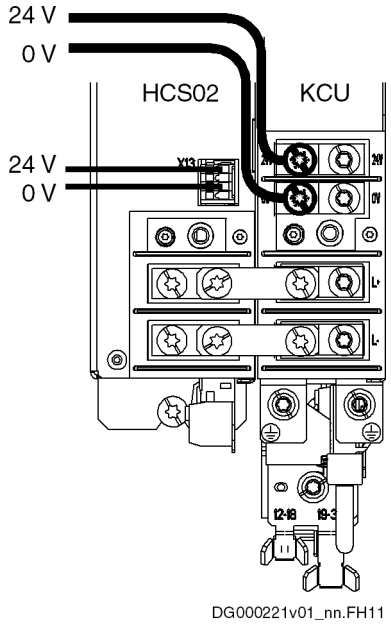 For HCS02 devices, the 24V supply is connected to the electronic control system KCU with **cables** (cross section: min. 6 mm^2 (AWG 10)).	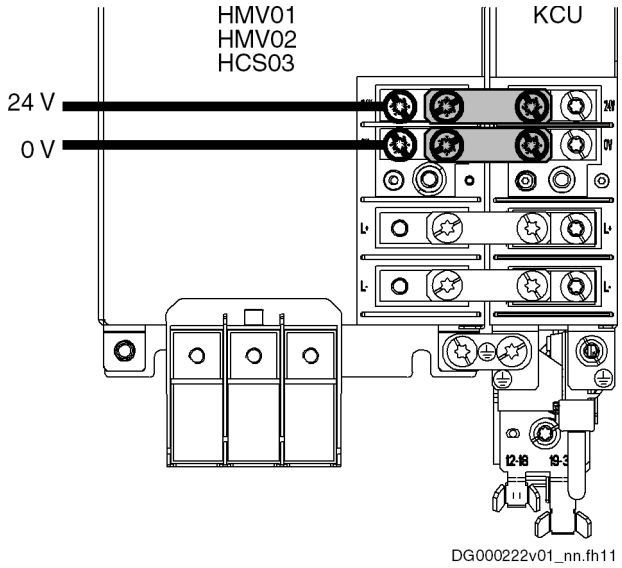 For HCS03, HMV01 and HMV02 devices, the 24V supply is connected to the electronic control system KCU with **contact bars**.

Fig.6-16: Connecting the 24V supply

6.3 Connection Points of KSM

6.3.1 Position of Connection Points

☞ For X3.1 and X3.2, use ready-made hybrid cables and terminal connectors by Rexroth.

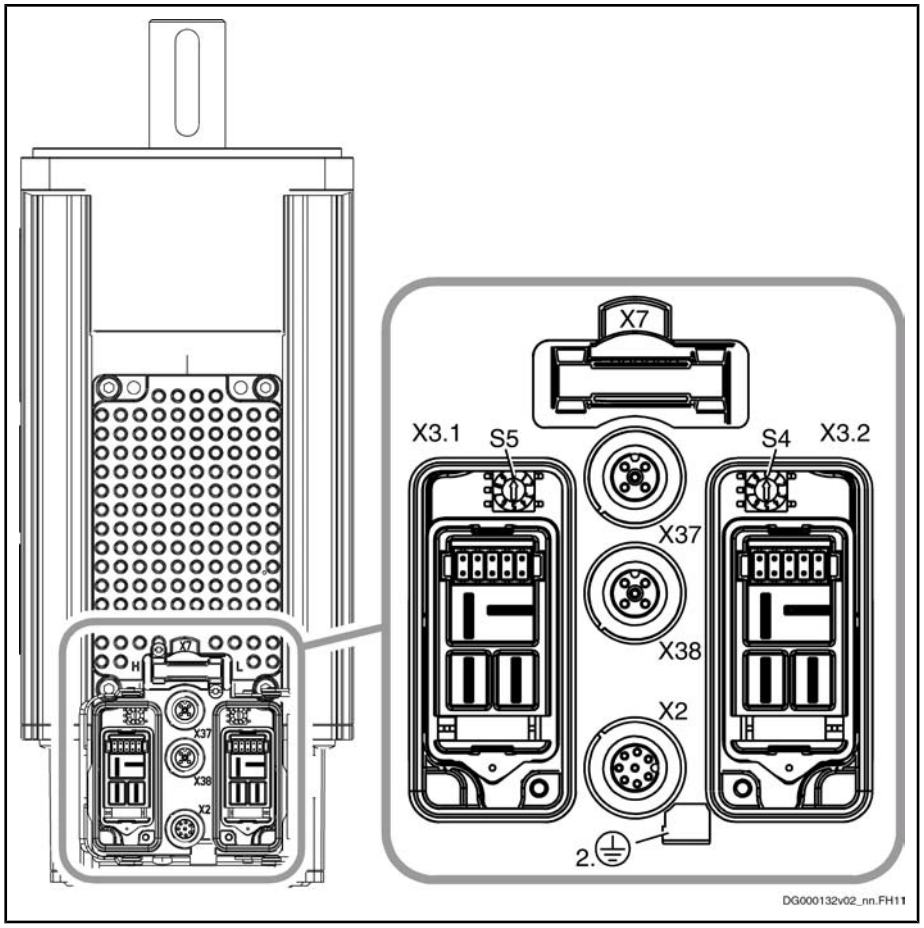

S5	SERCOS address selector switch (10×)
S4	SERCOS address selector switch (1×)
X2	Serial interface (RS232)
X3.1, X3.2	Hybrid cable
X7	MultiMediaCard
X37, X38	Digital inputs/outputs
2.	Second connection point of equipment grounding conductor

Fig.6-17: Connection Points KSM

6.3.2 X2, Serial Interface, Service Input "Release brake"

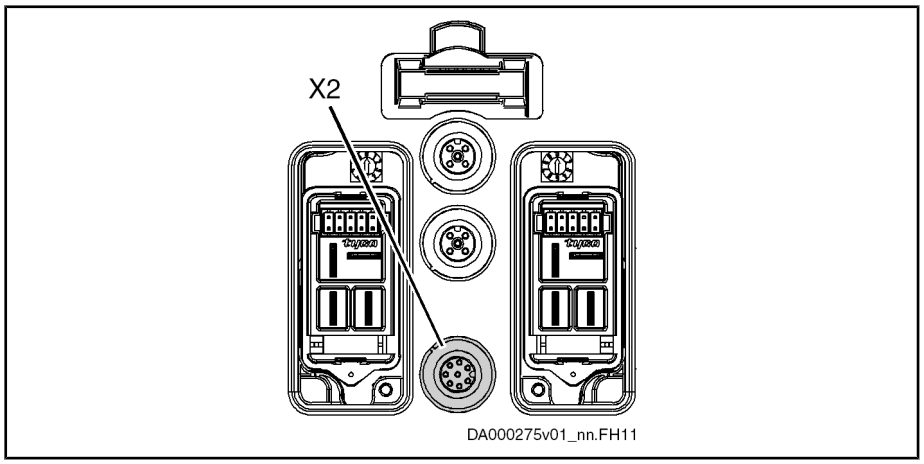

Fig.6-18: X2

Courtesy of CMA/Flodyne/Hydradyne ▪ Motion Control ▪ Hydraulic ▪ Pneumatic ▪ Electrical ▪ Mechanical ▪ (800) 426-5480 ▪ www.cmafh.com

Courtesy of CMA/Flodyne/Hydradyne ▪ Motion Control ▪ Hydraulic ▪ Pneumatic ▪ Electrical ▪ Mechanical ▪ (800) 426-5480 ▪ www.cmafh.com

Connection Points

View	Connection	Signal name	Function
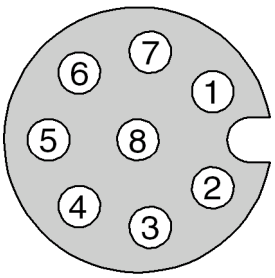 DA000198v01_nn.FH11	8	GND	Reference potential
	7	RxD	Receive Data
	6	TxD	Transmit Data
	5	RTS	Request To Send
	4	n. c.	Reserved, not connected
	3	n. c.	Reserved, not connected
	2		Input "release brake":
	1		Externally connect connection X2.1 to X2.2 to release brake
Female connector M12 (8-pin)	**Unit**	**Min.**	**Max.**
Cable cross section stranded wire	mm^2	0,25	n.s.
Ready-made connection cable		RKB0006 (optional accessory; see index entry "RKB0006")	

Fig.6-19: Function, Pin Assignment, Properties

☞ Connected cables reduce the noise immunity.
Remove the cable at X2 when it is not required.

Description

The serial interface (RS232) is required for programming, parameterization and diagnosis during commissioning and servicing (with a PC and the commissioning software Rexroth IndraWorks D).

Properties

Electrical isolation	None
Number of nodes	Maximum 1
Transmission distance	Up to 15 m
Transmission rates	9600/19200 baud

☞ The interface does not have electrical isolation. The potential difference between control section and connected data terminal equipment must always be less than 1 volt.

Courtesy of CMA/Flodyne/Hydradyne ▪ Motion Control ▪ Hydraulic ▪ Pneumatic ▪ Electrical ▪ Mechanical ▪ (800) 426-5480 ▪ www.cmafh.com

6.3.3 X3.1, X3.2 Connection Point Hybrid Cable

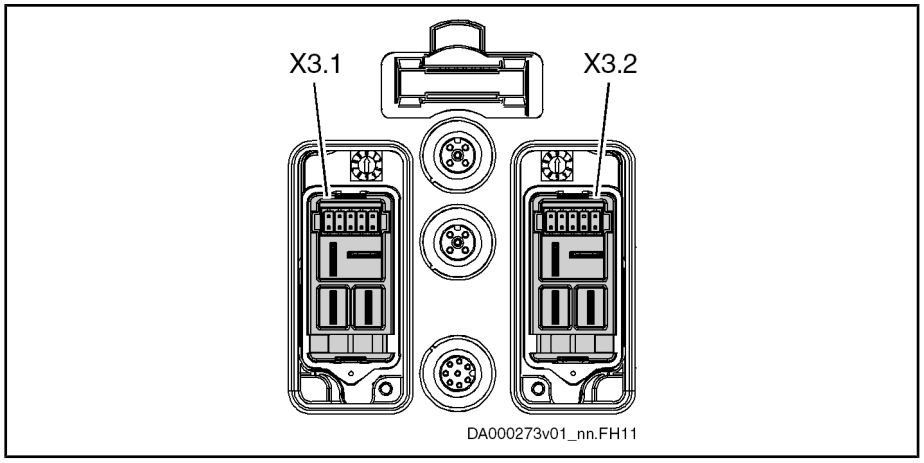

Fig.6-20: X3.1 and X3.2

View	Connection	Signal name	Function
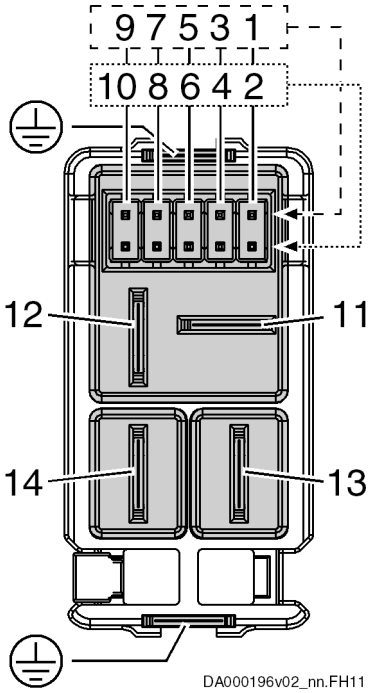	⏚	PE	Equipment grounding conductor
	14	L-	Power supply, DC 750 V, 25 A
	13	L+	
	12	0V	42V supply, max. 5 A
	11	42V	
	10	Bb_A	Control signals (24 V)
	9	Ud	
	8	___ Warn	
	7	Bb_V	
	6	___ E-Stop	
	5	Shield	SERCOS ring as RS422
	4	RxD-	
	3	TxD-	
	2	TxD+	
	1	RxD+	
Contact design	Pins on device		

Fig.6-21: Function, Pin Assignment, Properties

Courtesy of CMA/Flodyne/Hydradyne ▪ Motion Control ▪ Hydraulic ▪ Pneumatic ▪ Electrical ▪ Mechanical ▪ (800) 426-5480 ▪ www.cmafh.com

6.3.4 X7, Connection Point MultiMediaCard

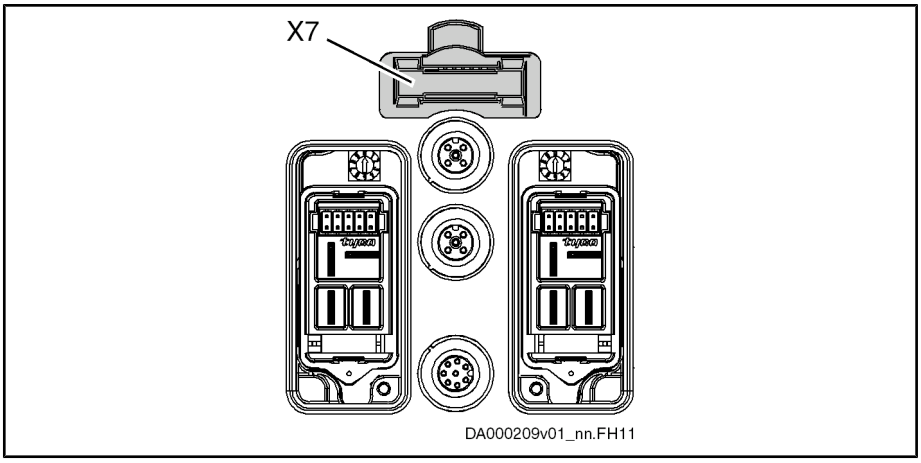

Fig.6-22: X7

A MultiMediaCard (MMC; product name: PFM02) is contained in the scope of supply.

Description

X7 is used for reading and storing data (firmware, drive parameters, operating data) from or to the MultiMediaCard.

NOTICE **Risk of damage by MMC incorrectly plugged in!**

When you plug in the MMC, the contacts must point at the heat sink! Otherwise, the MMC or the device might be damaged when you screw the MMC cover.

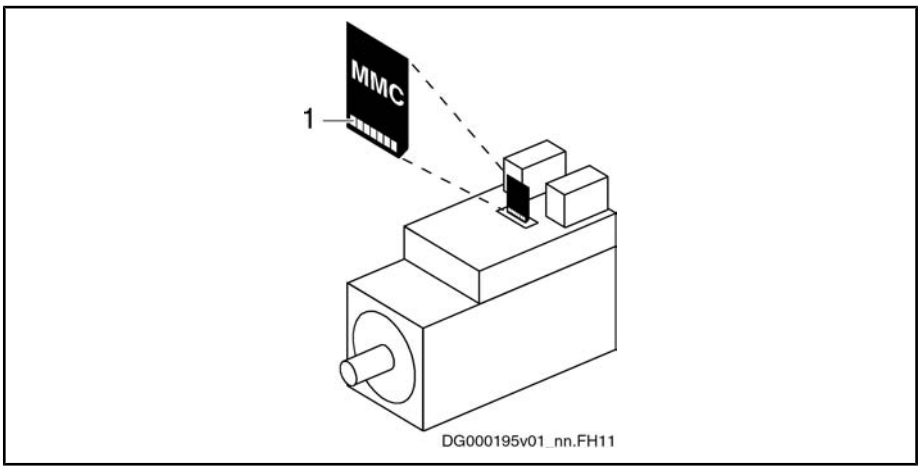

1 Contacts of MMC

Fig.6-23: Plugging in the MMC

For additional information on the MMC, see Functional Description of firmware (index entry "MMC (MultiMediaCard)").

6.3.5 X37, X38, Digital Inputs/Outputs

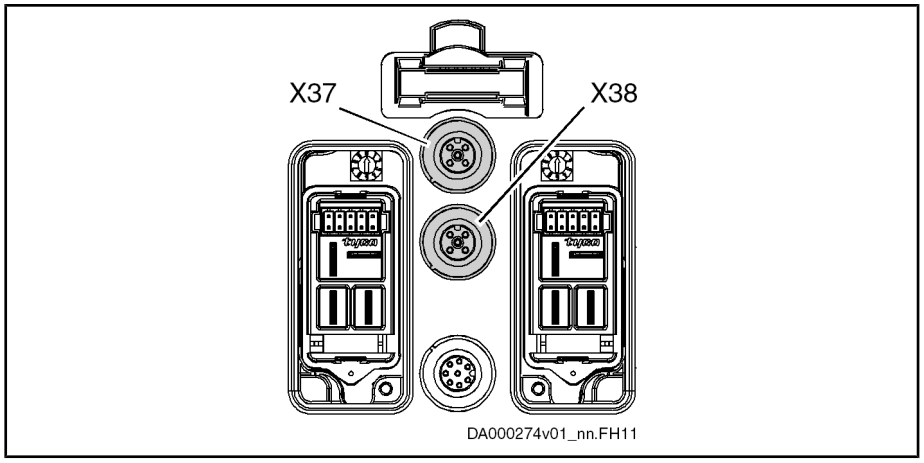

Fig.6-24: X37 and X38

View	Connection	Signal name	Function
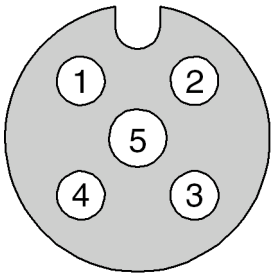	X37.1	U_{ext}	External supply 19 … 30 V, max. 1 A, connected to X38.1
	X37.2	I/O_3	Dig. I/O, configurable
	X37.3	0 V_{ext}	Reference potential; external supply, connected to X38.3
	X37.4	I/O_1	Dig. I/O, configurable, can be used as probe [1)]
	X37.5	Shield	For cable shield
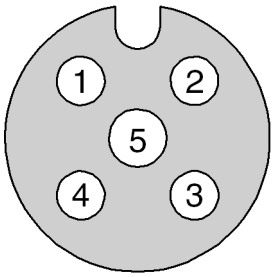	X38.1	U_{ext}	External supply 19 … 30 V, max. 1 A, connected to X37.1
	X38.2	I/O_4	Dig. I/O, configurable
	X38.3	0 V_{ext}	Reference potential; external supply, connected to X37.3
	X38.4	I/O_2	Dig. I/O, configurable, can be used as probe [1)]
	X38.5	Shield	For cable shield

M12 (5-pin) female	Unit	Min.	Max.
Connection cable stranded wire	mm^2	0,25	0,25
Cable cross section	AWG	-	-
Ready-made connection cable		RKS0010 (optional accessory; see index entry "RKS0010")	

1) See also documentation "Rexroth IndraDrive, Drive Controllers, Control Sections", Digital Inputs Type 2 (Probe)

Fig.6-25: Function, Pin Assignment, Properties

☞ The digital inputs/outputs correspond to IEC 61131-2, type 1.

Courtesy of CMA/Flodyne/Hydradyne ▪ Motion Control ▪ Hydraulic ▪ Pneumatic ▪ Electrical ▪ Mechanical ▪ (800) 426-5480 ▪ www.cmafh.com

Courtesy of CMA/Flodyne/Hydradyne ▪ Motion Control ▪ Hydraulic ▪ Pneumatic ▪ Electrical ▪ Mechanical ▪ (800) 426-5480 ▪ www.cmafh.com

Connection Points

Properties

- Distributed to two 5-pin M12 connectors (X37 and X38), there is a total of **4 configurable**, **isolated inputs/outputs**.

  Configuration is done with the parameter "P-0-0300, Digital I/Os, assignment list".
- The inputs **I_1** (X37.4) and **I_2** (X38.4) can be used as **probe inputs**.
- Internally, the outputs are supplied **in isolated form** with **24V (> 18 V) / 100 mA**. The current can be distributed to the four outputs. If more current is required in total, you have to supply, in addition, 24V externally via the connections X38.1 or X37.1 (U_{ext}).
- Each of the **short-circuit proof** outputs can be loaded with 0.5 A. In total, a maximum of 1 A is possible.
- In the condition as supplied, there is an **o-ring** at the root of the thread between the female connector insert and the electronics housing which assures the tightness of the M12 female connectors. Without this o-ring, neither the protective cap nor the connector are tight!

Data: Inputs

Data	Unit	Min.	Typ.	Max.
Allowed input voltage	V	-3	n.s.	30
On	V	15	n.s.	n.s.
Off	V	n.s.	n.s.	5
Input current	mA	2	n.s.	5
Input resistance	kΩ	Non-linear, varies depending on input voltage		
Sampling frequency	kHz	Depending on firmware		
Control delay	µs	20	n.s.	100 + 1 cycle time of position control
Pulse width t_{Puls} (probe)	µs	4	n.s.	n.s.
Measuring accuracy t_x (probe)	µs	n.s.	n.s.	1

Fig.6-26: Digital Inputs

Probe Input

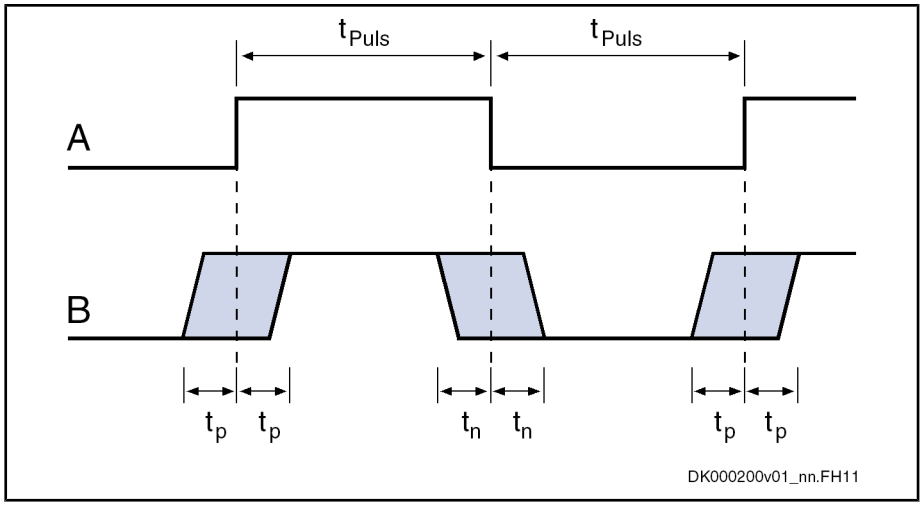

A	Signal
B	Signal detection at probe input
t_{Puls}	Pulse width
t_p	Measuring accuracy of the positive signal edge
t_n	Measuring accuracy of the negative signal edge

Fig.6-27: Signal Detection at Probe Input

☞ **Probe inputs** are "rapid" inputs. For control use bounce-free switching elements (e.g. electronic switches) to avoid incorrect evaluation.

Data: Outputs

Data	Unit	Min.	Typ.	Max.
Output voltage ON	V	U_{ext} - 0.5	24	U_{ext}
Output voltage OFF	V	n.s.	n.s.	2,1
Output current OFF	mA	n.s.	n.s.	0,05
Allowed output current per output	mA	n.s.	n.s.	500
Allowed output current total or per group	mA	n.s.	n.s.	1000
Update interval	ns	Depending on firmware		
Short circuit protection		Present		
Overload protection		Present		
Allowed energy content of connected inductive loads, e.g. relay coils; only allowed as single pulse	mJ	n.s.	n.s.	400

Fig.6-28: Digital Outputs

Courtesy of CMA/Flodyne/Hydradyne ▪ Motion Control ▪ Hydraulic ▪ Pneumatic ▪ Electrical ▪ Mechanical ▪ (800) 426-5480 ▪ www.cmafh.com

Courtesy of CMA/Flodyne/Hydradyne ▪ Motion Control ▪ Hydraulic ▪ Pneumatic ▪ Electrical ▪ Mechanical ▪ (800) 426-5480 ▪ www.cmafh.com

Internal Circuit

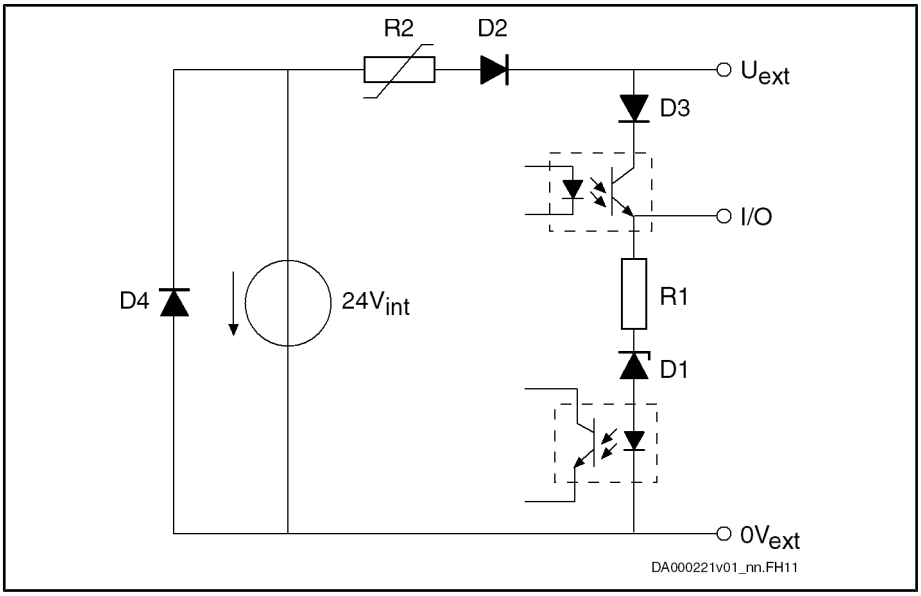

D1	5V1
R1	2k ohm
R2	100 mA
$24V_{int}$	Internal voltage source

Fig.6-29: Internal Circuit of the Digital Inputs/Outputs

☞ The digital outputs have been realized with high-side switches. This means that these outputs can actively supply current, but not sink it.

☞ The energy absorption capacity of the outputs is used to limit voltage peaks caused when inductive loads are switched off. Limit voltage peaks by using free-wheeling diodes directly at the relay coil.

6.3.6 Second Connection Point of Equipment Grounding Conductor

Parts of the installation with attached KSM/KMS must be connected to the equipment grounding system of the installation. The housings of the KSM/KMS then are connected to the equipment grounding system of the installation via the flange. This connection is required in addition to the equipment grounding conductor in the hybrid cable, because the leakage current of a distributed servo drive KSM/KMS is greater than 3.5 mA.

Additionally connect the KSM/KMS housing via a **second** equipment grounding conductor to the equipment grounding system of the installation, when KSM/KMS is attached to parts of the installation which

- have bad electroconductive properties

  or

- cannot be connected to the equipment grounding system of the installation.

Courtesy of CMA/Flodyne/Hydradyne ▪ Motion Control ▪ Hydraulic ▪ Pneumatic ▪ Electrical ▪ Mechanical ▪ (800) 426-5480 ▪ www.cmafh.com

⚠ WARNING **High housing voltage and high leakage current! Danger to life, risk of injury by electric shock!**

In addition to the connection via the hybrid cable, connect the **second connection point of equipment grounding conductor** at KSM/KMS to the equipment grounding system of the installation, when the electric resistance between the mechanical holder of the flange and the equipment grounding system of the installation is greater than **5 ohm**.

☞ The **first** equipment grounding conductor is routed via the hybrid cable from **X3.1 / X3.2 (KSM/KMS)** to the connection point **X54 (KCU)** and connected to the equipment grounding system of the installation via KCU.

Second Connection Point of Equipment Grounding Conductor at KSM/KMS Housing

View	Connection	Signal name	Function
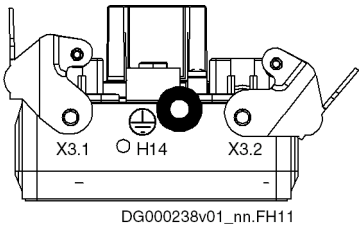	⏚	Equipment grounding conductor	Second connection point of equipment grounding conductor Is used to connect KSM/KMS to a grounded part of the installation, e.g. the machine base
Thread M4 (for ring cable lug)	**Unit**	**Min.**	**Max.**
Tightening torque	Nm	2,6	3,1
Cable cross section stranded wire	mm^2	2,5	4
Connection cable	AWG	14	12

Fig.6-30: Second Connection Point of Equipment Grounding Conductor, Properties

6.4 Connection Points of KMS

6.4.1 Position of Connection Points

☞ For X3.1 and X3.2, use ready-made hybrid cables and terminal connectors by Rexroth.

Courtesy of CMA/Flodyne/Hydradyne ▪ Motion Control ▪ Hydraulic ▪ Pneumatic ▪ Electrical ▪ Mechanical ▪ (800) 426-5480 ▪ www.cmafh.com

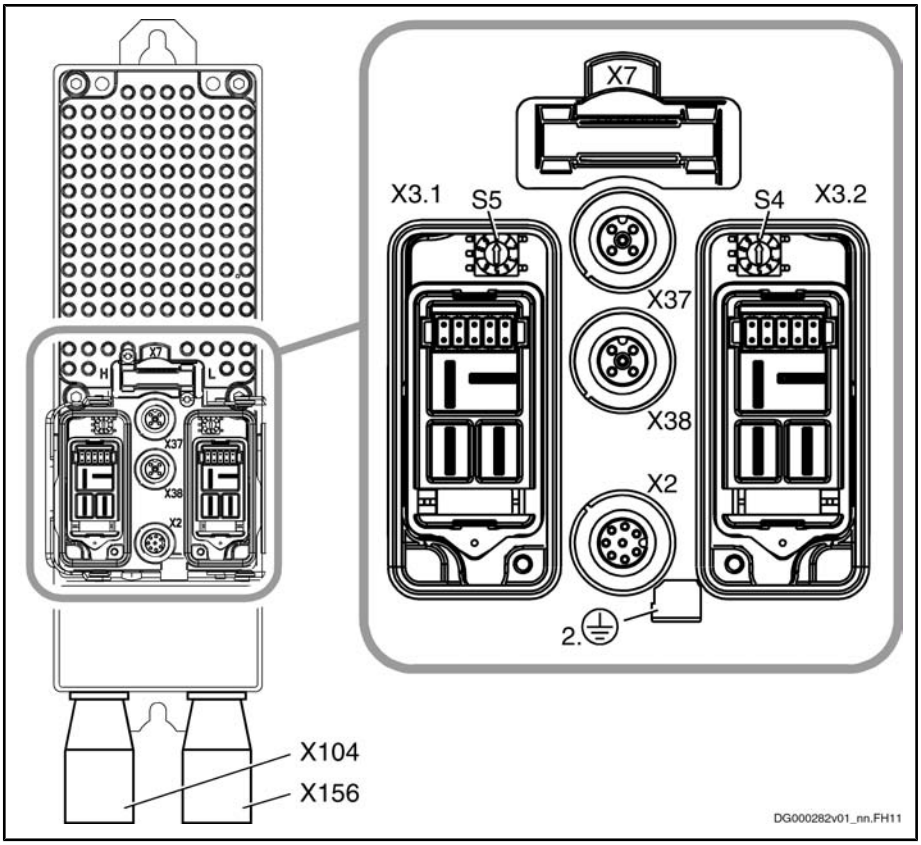

S5	SERCOS address selector switch (10×)
S4	SERCOS address selector switch (1×)
X2	Serial interface (RS232)
X3.1, X3.2	Hybrid cable
X7	MultiMediaCard
X37, X38	Digital inputs/outputs
X104	Encoder evaluation (optional)
X156	Motor (power, motor temperature monitoring, control of motor holding brake (optional))
2.	Second connection point of equipment grounding conductor

Fig.6-31: Connection Points of KMS

6.4.2 X2, Serial Interface, Service Input "Release brake"

See description of KSM: Chapter 6.3.2 , X2, Serial Interface, Service Input Release brake, page 95

☞ With the "open-loop" characteristic, the "release brake" input does not exist.

6.4.3 X3.1, X3.2, Connection Point Hybrid Cable

See description of KSM: Chapter 6.3.3 , X3.1, X3.2 Connection Point Hybrid Cable, page 97

6.4.4 X7, Connection Point MultiMediaCard

See description of KSM: Chapter 6.3.4 , X7, Connection Point MultiMediaCard , page 98

6.4.5 X37, X38, Digital Inputs/Outputs

See description of KSM: Chapter 6.3.5 , X37, X38, Digital Inputs/Outputs, page 99

6.4.6 X104, Connection for Motor Encoder

Description For encoders with a supply voltage of **12 volt (max. 60 mA)**:

Sin-cos encoder 1 V_{pp}; HIPERFACE®

The connection only exists at devices with an ENH encoder interface (see Type Code KMS).

View	Connection	Signal name S1, M1 (HIPERFACE®)	Function
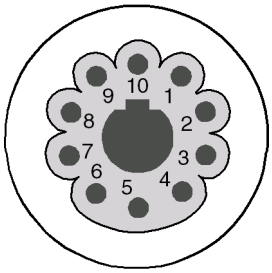 DA000310v01_nn.fh11	1	VCC_Encoder	Power supply
	2	GND_Encoder	Power supply reference potential
	3	A +	Track A positive
	4	A -	Track A negative
	5	B +	Track B positive
	6	B -	Track B negative
	7	EncData+	Data transmission
	8	EncData-	Data transmission
	9	n. c.	-
	10	n. c.	-
	Overall shield via connector housing		
10-pin, female connector	**Unit**	**Min.**	**Max.**
Connection cable stranded wire	mm^2	n.s.	n.s.
Order type of cable	RKG4201		
Allowed length	m	n.s.	7,5

Fig.6-32: X104, Motor Encoder

Courtesy of CMA/Flodyne/Hydradyne ▪ Motion Control ▪ Hydraulic ▪ Pneumatic ▪ Electrical ▪ Mechanical ▪ (800) 426-5480 ▪ www.cmafh.com

Courtesy of CMA/Flodyne/Hydradyne ▪ Motion Control ▪ Hydraulic ▪ Pneumatic ▪ Electrical ▪ Mechanical ▪ (800) 426-5480 ▪ www.cmafh.com

6.4.7 X156, Connection for Motor

View	Connection	Signal name	Function
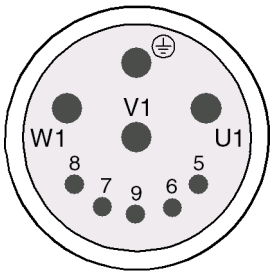 DA000311v01_nn.FH11	U1, V1, W1	-	Power output
	⏚	-	Equipment grounding conductor
	5	MotTemp+	Input temperature measurement (temperature sensor KTY84)
	6	MotTemp-	
	7 (optional)	Br+ / +24V	Output for controlling the motor holding brake
	8 (optional)	Br- / 0V	
	9	GND_shld	Shield
10-pin, female connector	**Unit**	**Min.**	**Max.**
Connection cable stranded wire	mm^2	n.s.	n.s.
Output for controlling the motor holding brake (X156.7/8)			
Output current (A)	A	n.s.	1
Continuous power overvoltage protection (B)	W	n.s.	1,5
Energy absorption (B)	Ws	n.s.	3
Order type of cable	RKL4305		
Allowed length	m	n.s.	7,5

Fig.6-33: X156, Motor

6.4.8 Second Connection Point of Equipment Grounding Conductor

See description of KSM (index entry "KSM → Second connection point of equipment grounding conductor")

7 Notes on Project Planning

7.1 Combining the Individual Components

7.1.1 Power Supply

Supply Units

Both supply units (HMV01, HMV02) and converters (HCS02, HCS03) can be used as supply units for a Rexroth IndraDrive Mi drive system.

KCU at HMV and HCS - number of axes, capacitances C_y

The electronic control system KCU passes the DC bus voltage of the supply unit to the KSM/KMS via the hybrid cable. Due to decoupling components, KCU with the maximum number of KSM/KMS acts like **one more** axis with higher C_Y (capacitance against ground) for HMV01.1E, HMV02.1E supply units and HCS converters.

When selecting the supply unit or converter, observe the allowed combinations of HNF/NFD mains filter and HNL mains choke in the documentation "Rexroth IndraDrive Drive Systems With HMV01/02 HMS01/02, HMD01, HCS02/03" (index entry "Mains connection → With HNL mains chokes, HNF mains filters and HNK mains chokes").

The sum of the electric powers of all KCU at the DC bus of the supply unit mustn't exceed P_{DC_cont} and P_{DC_max} of the supply unit (HMV or HCS).

$$\sum P_{DC_cont(KCU)} \leq P_{DC_cont(HMV,HCS)}$$

$P_{DC_cont(KCU)}$ Continuous power KCU
$P_{DC_cont(HMV, HCS)}$ Continuous power of supply unit

Fig.7-1: Continuous Power of the Supply Unit

Instead of P_{DC_cont}, it is allowed to use the actually occurring continuous power of KCU (KSM/KMS).

$$\sum P_{DC_max(KCU)} \leq P_{DC_max(HMV,HCS)}$$

$P_{DC_max(KCU)}$ Peak power KCU
$P_{DC_max(HMV, HCS)}$ Peak power of supply unit

Fig.7-2: Peak Power of the Supply Unit

Notes on Project Planning With HCS02 as Supply Unit for KCU and KSM/KMS

The types HCS02.1E-W0054 and -W0070 are allowed as supply units for KCU and KSM/KMS.

Courtesy of CMA/Flodyne/Hydradyne ▪ Motion Control ▪ Hydraulic ▪ Pneumatic ▪ Electrical ▪ Mechanical ▪ (800) 426-5480 ▪ www.cmafh.com

Courtesy of CMA/Flodyne/Hydradyne ▪ Motion Control ▪ Hydraulic ▪ Pneumatic ▪ Electrical ▪ Mechanical ▪ (800) 426-5480 ▪ www.cmafh.com

☞ **Additional capacitance C_{DC_ext} required for HCS02!**

For operation as supply unit with low load at the motor output ($P_{out} \leq 10\ \% \times P_{DC_cont}$; $I_{out} \leq 10\ \% \times I_{out_cont}$), the performance data are available without additional capacitance C_{DC_ext} at the DC bus.

Use additional capacitors C_{DC_ext} at the DC bus, when the load at the motor output is higher.

When you use the DC bus capacitor unit HLC01.1, the following **guide value** applies when you determine the additional capacitance C_{DC_ext}:

- **50 µF** per kW of installed continuous power KSM/KMS, thus 700 µF for a KCU01.2-SE-SE*-025 operated at rated power.

☞ The power supply monitoring of KSM/KMS can be set.

See also "P-0-0114, Undervoltage threshold"

See also Functional Description of firmware → "Power Supply".

7.1.2 Length of Hybrid Cable

☞ **Allowed cable length depending on load**

The maximum allowed total length is limited depending on the kind of load of the hybrid cable.

Observe the following limit values for total length and segment length within a string of drives.

The number of KSM/KMS devices in the string of drives has an influence on the allowed cable length (see also index entry "String of drives → Number of KSM/KMS in string").

If necessary, install more KCU devices.

Limit values	Symbol	Unit	Value	
			Min.	Max.
For permanent routing				
Allowed total length [1]	l_{total}	m	3	200
Allowed cable length from KCU to first KSM/KMS	l	m	3 [2]	75
Allowed segment length [3]	l_{seg}	m	1 [4]	75
For routing with stress in flexible cable track				
Max. allowed length in flexible cable track	$l_{max_schlepp}$	m	See fig. 7-4	

1) Total length: Total cable length from connection point KCU to last KSM/KMS of a string of drives
2) For electric decoupling at rated current
3) Segment length: Cable length between two KSM/KMS
4) For thermal decoupling of the connection points at rated current

Fig.7-3: Limit Values of Cable Length

For routing in the flexible cable track, determine the "maximum allowed length in the flexible cable track" $l_{max_schlepp}$ within the maximum segment length l_{seg} by means of the figure below.

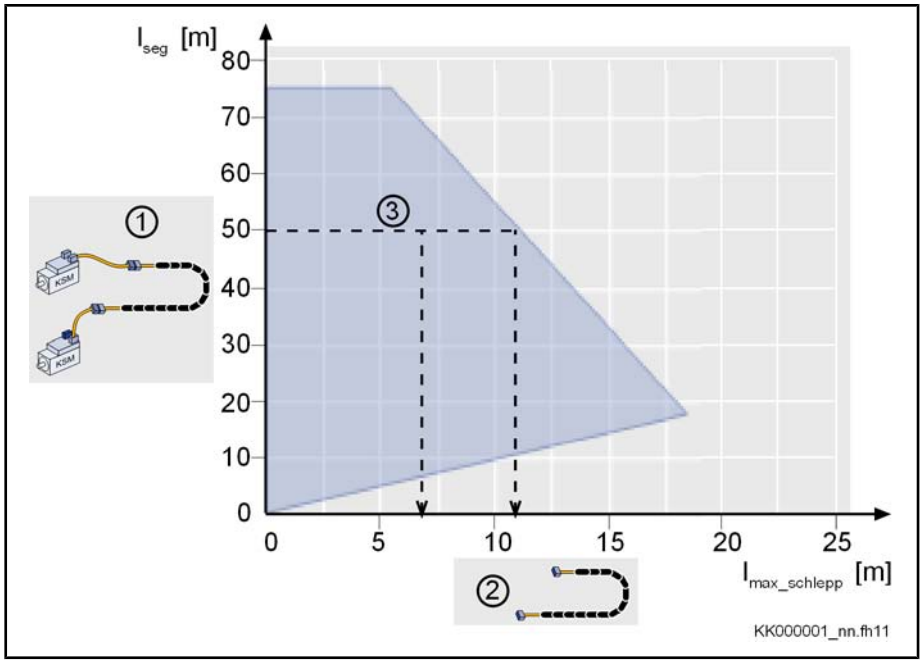

1	Segment length
2	Maximum allowed length in flexible cable track
3	Example: With a segment length of 50 m, the maximum allowed length in the flexible cable track is 11 m. Alternatively, it is possible to have smaller lengths in the flexible cable track.

Fig.7-4: Maximum Allowed Cable Length for Routing in the Flexible Cable Track

The length $l_{max_schlepp}$ taken from the figure is the length of the movable part of the cable connection between two motors. As an alternative, the movable part of the flexible cable track connection can be realized in exchangeable and thereby easy-to-maintain form with the cable RKH0600.

7.1.3 Electronic Control System KCU

General Information

Functions

The electronic control system KCU mainly fulfills the following functions:

- Passing the power supply to the string of drives
- 24 V supply of the KSM/KMS in the string of drives
- Exchange of status signals between motors and supply unit
- Display of the status signals of the string of drives for diagnostic purposes
- Conversion of SERCOS from fiber optic cable to RS422

SERCOS Distortion Indicator

The SERCOS conversion function from fiber optic cable to RS422 is passive. That is why the electronic control system KCU has **no** SERCOS distortion indicator.

Arrangement

The electronic control system KCU is arranged next to the supply unit or next to other axes mounted between supply unit and KCU. Axes with a high degree of power consumption should be arranged as near as possible to the supply unit.

Control Voltage Supply

The electronic control system KCU needs 24V supply for operation. From the applied 24V supply,

- KCU supplies itself and

Courtesy of CMA/Flodyne/Hydradyne ▪ Motion Control ▪ Hydraulic ▪ Pneumatic ▪ Electrical ▪ Mechanical ▪ (800) 426-5480 ▪ www.cmafh.com

Courtesy of CMA/Flodyne/Hydradyne ▪ Motion Control ▪ Hydraulic ▪ Pneumatic ▪ Electrical ▪ Mechanical ▪ (800) 426-5480 ▪ www.cmafh.com

Notes on Project Planning

- at "X53, Control voltage output" generates the control voltage for the KSM/KMS in the string of drives.

Control Voltage KCU, KSM, KMS

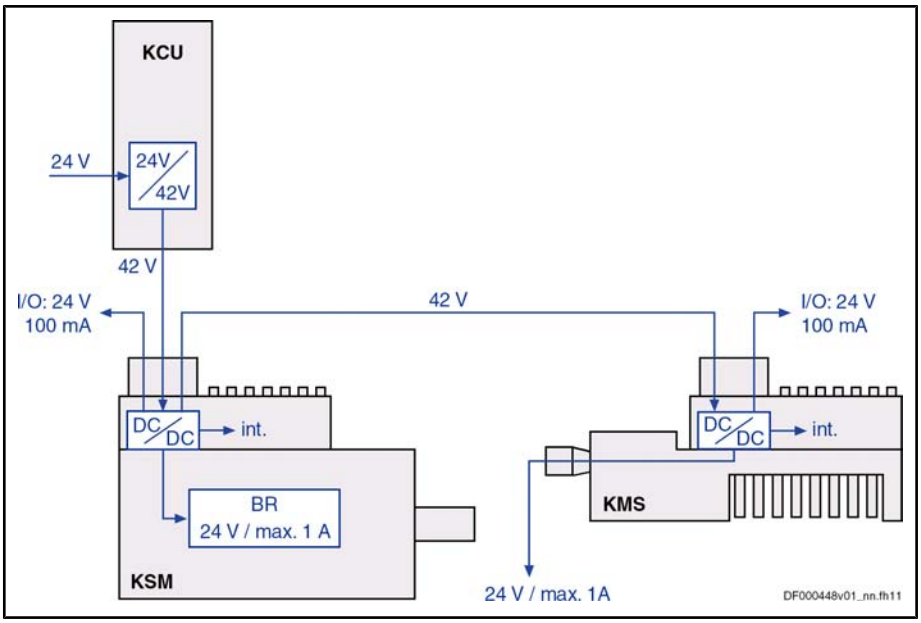

BR	Circuit for brake control
I/O	Inputs / outputs
int.	Internal electronics
KCU	Electronic control system
KMS	Distributed drive controller
KSM	Distributed servo drive

Fig.7-5: Control Voltage KCU, KSM, KMS

At a KCU, it is permitted to operate KSM/KMS with and without integrated holding brake (observe allowed number of axes and cable length). The load at X53 mustn't exceed the value of P_{out} (see technical data of KCU). In operation under rated conditions, the sum of P_{out} and P_{Diss_cont} is generated at the input "control voltage supply +24V, 0V" of KCU as load for the 24V supply.

☞ Dimension the 24V supply for the power consumption of KCU and the load-dependent inrush current.

Take into account that other loads (e.g. HMV, HCS) are operated at the same 24V supply.

For selecting the 24V supply, see also index entry "Control voltage → Specification".

Load KCU Output X53

$$P_{42V} = f_{cable} \times \left[n \times P_{N3(KSM)} + m \times \left(P_{N3(KSM)} \right) \right]$$

P_{42V}	Load KCU at X53
f_{cable}	1.3 (correction factor for losses on the hybrid cable)
n	Number of KSMs without integrate holding brake
m	Number of KSMs with integrated holding brake
$P_{N3\ (KSM)}$	Power consumption KSM

Fig.7-6: Load X53

Courtesy of CMA/Flodyne/Hydradyne ▪ Motion Control ▪ Hydraulic ▪ Pneumatic ▪ Electrical ▪ Mechanical ▪ (800) 426-5480 ▪ www.cmafh.com

Power Consumption of KCU From 24V Supply

$$P_{N3(KCU)} = f_{SMPS} \times P_{42V}$$

$P_{N3\ (KCU)}$ Power consumption KCU
f_{SMPS} 1.2 (correction factor for losses KCU power supply unit)
P_{42V} Load KCU at X53
Fig.7-7:

☞ The 24V supply has to make available the inrush current generated when each electronic control system KCU is switched on. The inrush current depends on the power consumption $P_{N3\ (KCU)}$ (see calculation above):

- **$P_{N3(KCU)} \leq 200$ W:**
  The inrush current is fixed to 8 A
- **200 W < $P_{N3(KCU)}$ < 403 W** (~20 KSM without holding brake):
  The inrush current is $P_{N3(KCU)}/U_{N3}$: 8 A < I_{N3_EIN} < 16.8 A

The holding brakes integrated in KSM have no effect on the inrush current of KCU.

Number of KSM/KMS in the String of Drives

☞ Each string of drives with KSM/KMS requires its own electronic control system KCU.

Depending on the application, the cable length in the string of drives and the load of KCU (peak and continuous power) can reduce the number of allowed KSM/KMS in the string.

☞ Due to the system, a **maximum of 20 KSM/KMS** can be operated at one KCU.

Install more KCUs, if you want to operate more than 20 KSM/KMS.

Length of Hybrid Cable vs. Number of KSM/KMS

As regards the cable length, the allowed number of KSM/KMS in a string of drives is limited by the fact that voltage drops occur on the hybrid cable. Thereby, the voltage at KSM/KMS is less than at the output X53 of KCU.

The voltage drops on the motor cable depend on the **power consumption** of the KSM/KMS in the string of drives. The differences in power consumption are due to KSM/KMS **with** integrated holding brake and KSM/KMS **without** integrated holding brake.

☞ Observe the allowed total length of the hybrid cable according to the diagram below.

The allowed peak power depends on the cable length (see fig.: Available Peak Power vs. Cable Length for DC 500 V and DC 750 V on page 115).

If necessary, install more KCU devices.

Courtesy of CMA/Flodyne/Hydradyne ▪ Motion Control ▪ Hydraulic ▪ Pneumatic ▪ Electrical ▪ Mechanical ▪ (800) 426-5480 ▪ www.cmafh.com

Notes on Project Planning

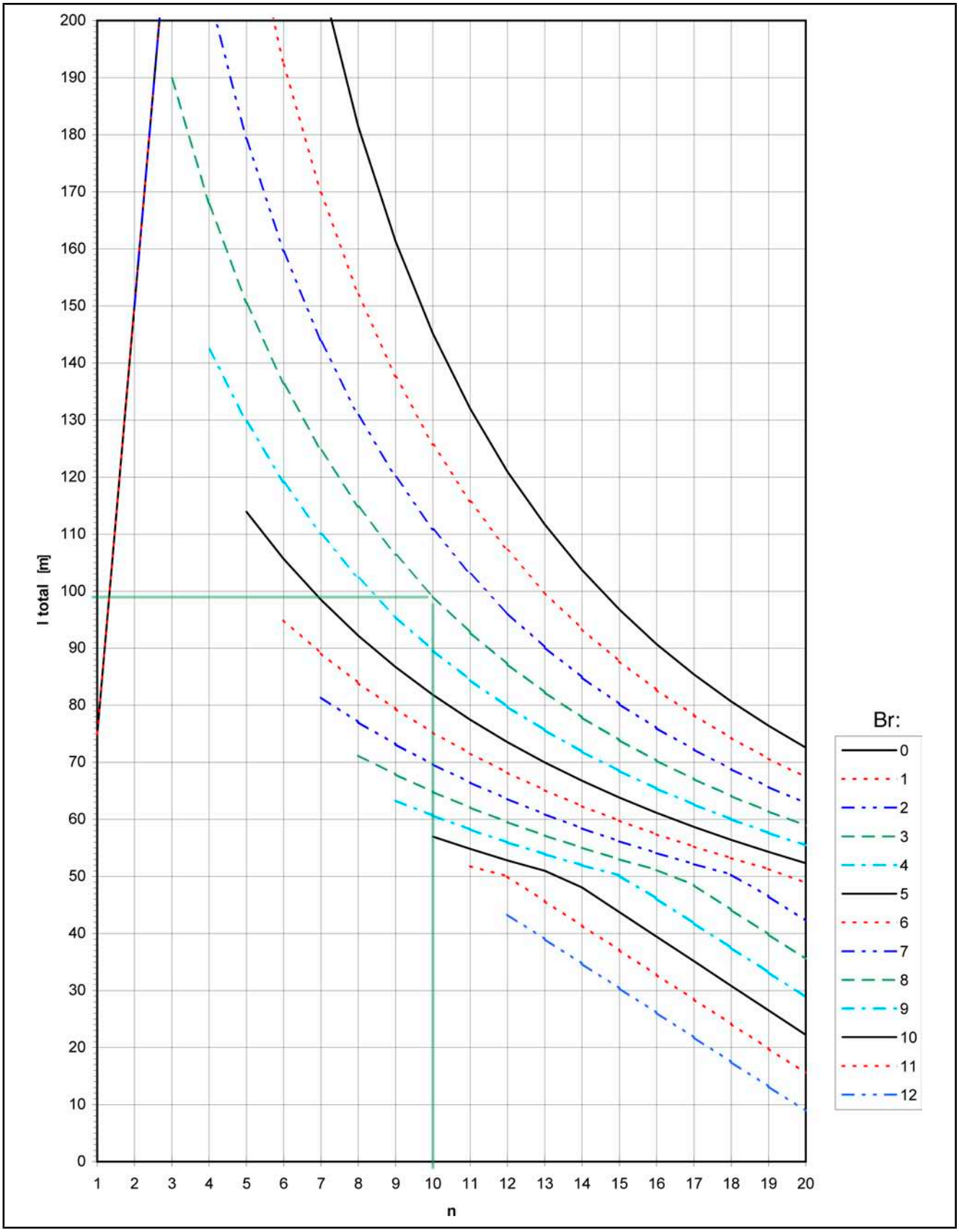

l_{total} [m]	Allowed total length
n	Number of servo drives KSM/KMS

Br Number of servo drives KSM/KMS with brake

Fig.7-8: Maximum Cable Length

(The example of 10 servo drives (n = 10) shown in the figure, thereof 3 with brake (Br: 3), results in a maximum cable length of 99 m.)

☞ Observe that the allowed cable length also depends on the kind of load of the cable.

See index entry "Hybrid cables → Allowed lengths".

Power Supply KSM/KMS

A string for power supply in the Rexroth IndraDrive Mi system is designed as a bus (L+, L-) and consists of:

- Connector X54 at KCU
- Hybrid cable RKH
- Connectors X3.1 and X3.2 at KSM/KMS
- Terminal connector RHS at KSM/KMS

☞ **Comply with UL rating I_{Bypass}**

In the case of equal load, the greatest load of the hybrid cable is on the first cable segment.

In the string of drives, place powerful KSM/KMS as near as possible to the output of the electronic control system KCU.

Observe the maximum allowed bypass current I_{Bypass} in each segment (see technical data of KSM or technical data of KMS).

If necessary, install more KCU devices.

Available Power at a String of Drives

Available power P_{KCU_strang} at a string:

$$P_{KCU_strang} = U_{out} \times I_{out_max}$$

P_{KCU_strang} Available power at string of drives

U_{out} Output voltage, depending on supply unit

I_{out_max} Output current; see technical data of KCU

Fig.7-9: Available Power at a String KCU

With a small number of KSM/KMS and a low degree of power consumption in a string of drives (operation at partial load), the measurable value I_{strang} at the output of KCU is above the value which would result from the calculation of the power P_{LN} of KSM/KMS and U_{out} of KCU. The deviation is due to wattless currents; the influence of these currents is insignificant in operation under rated conditions.

Continuous Power

☞ **Comply with continuous power**

The sum of the electric powers of all KSM/KMS of a string of drives mustn't exceed the calculated value P_{KCU_strang} of the electronic control system KCU.

Courtesy of CMA/Flodyne/Hydradyne ▪ Motion Control ▪ Hydraulic ▪ Pneumatic ▪ Electrical ▪ Mechanical ▪ (800) 426-5480 ▪ www.cmafh.com

Courtesy of CMA/Flodyne/Hydradyne ▪ Motion Control ▪ Hydraulic ▪ Pneumatic ▪ Electrical ▪ Mechanical ▪ (800) 426-5480 ▪ www.cmafh.com

$$\sum P_{LN_nenn} \leq P_{KCU_strang}$$

P_{LN_nenn} Rated power KSM/KMS
P_{KCU_strang} Available power at string of drives
Fig.7-10: Checking the Continuous Power

Instead of P_{LN_nenn}, it is allowed to use the actually occurring continuous power of the KSM/KMS.

Taking the average speed and simultaneity factor into account, the sum of the installed rated motor powers therefore can be significantly higher with servo operation.

For data of the simultaneity factor with servo drives at machine tools and the determination of the power by means of speed and torque characteristic: See formulas in the documentation "Rexroth IndraDrive, Drive Systems With HMV01/02, HMS01/02, HMD01, HCS02/03" (index entry "Calculations").

Peak Power

Comply with peak power KCU

The sum of the electric powers of all KSM/KMS of a string of drives mustn't exceed the indicated value P_{DC_max} of the electronic control system KCU.

$$\sum P_{LN_max} \leq P_{DC_max}$$

P_{LN_max} Peak power of KSM/KMS
P_{DC_max} Peak power KCU
Fig.7-11: Peak power KCU

Derating of Peak Power

As the length of the hybrid cable increases, the peak power available at the cable end is reduced.

Peak power to be dimensioned depending on the cable length

Due to occurring voltage drops, the effective length of the motor cable influences the available peak power at KSM/KMS.

Observe the following diagrams and the sections

- "Peak Power When Accelerating" and
- "Peak Power When Decelerating".

To calculate the occurring peak power, use the formulas from the chapter "Calculations"of the documentation "Rexroth IndraDrive, Drive Systems HMV01/02, HMS01/02, HMD01, HCS02/03".

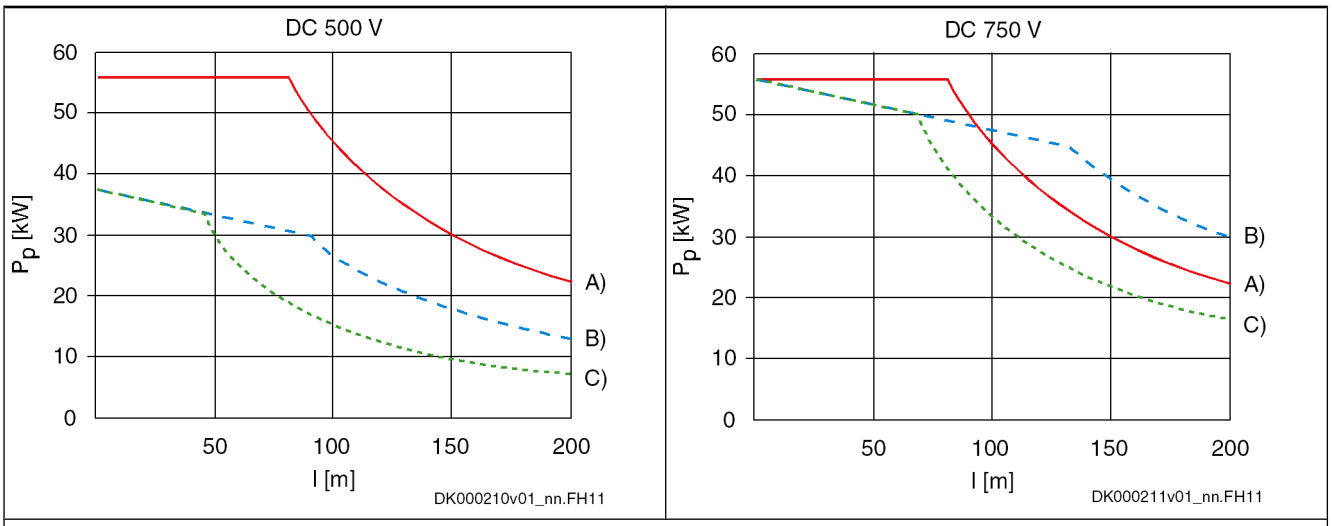

Data used for the diagrams:

- Maximum peak current of 3 × I_{Bypass}: 75 A
- Threshold of braking resistor in supply unit or converter: 820 V

  See also "P-0-0833, Braking resistor threshold"

  See also "P-0-0860, Converter configuration"

A)	Peak power when decelerating
B)	Acceleration power (n < 80%)
C)	Acceleration power (n < 90%)
P_P	Maximum peak power
l	Cable length

Fig.7-12: Available Peak Power vs. Cable Length for DC 500 V and DC 750 V

Peak Power When Accelerating

Due to voltage drops, less peak power is available at KSM/KMS with increasing length of the motor cable. During acceleration, this becomes noticeable by the reduction of the corner speed. The figure shows exemplary curves of reduction to 80% and 90% of the data sheet corner speeds. The maximum speed is proportional to the DC bus voltage available at the motor.

In the string of drives, place the KSM/KMS with the greatest power as near as possible to the output of KCU.

Peak Power When Decelerating

The peak power when decelerating is **independent** of the supply unit used and the mains voltage. But the peak power is reduced as of a cable length of approx. 80 m, due to the voltage limitation taking effect in KSM/KMS.

The critical case is when all motors decelerate at the same time with peak torque out of maximum speed (e.g. in the case of E-Stop).

Observe installed motor peak power

Sum of installed motor peak powers must be smaller than maximum peak power P_P indicated in the diagram.

If necessary, install more KCU devices.

Exception: The sum of the installed motor peak powers does not need to be reduced to the indicated maximum peak power P_P, if the design and arrangement within a string of drives ensure that the occurring motor peak powers do not add. This is the case, for example, if the drives have been mechanically connected in such a way that the energy flows to the DC bus are inversely

Courtesy of CMA/Flodyne/Hydradyne ▪ Motion Control ▪ Hydraulic ▪ Pneumatic ▪ Electrical ▪ Mechanical ▪ (800) 426-5480 ▪ www.cmafh.com

directed when decelerating (that is one drive absorbs the energy which one drive in the same string delivers when decelerating). Arrange these drives side by side in the string.

7.1.4 Motor Blower for KSM

Blowers are not available for distributed servo drives KSM.

7.1.5 Evaluation of Motor Encoders at KMS

Distributed drive controllers KMS evaluate sin-cos encoders 1 V_{pp}. This allows operating motors of the IndraDyn S line with S1 and M1 encoder systems.

7.1.6 Length of Motor Cables and Encoder Cables at KMS

The allowed length of motor cables at connection X156 or X104 of KMS is limited (see description of connection point X156 or X104).

7.1.7 Operation With Standard Motors

Distributed drive controllers KMS without the connection X104 (encoder interface = "NNN") are provided for operating converter-proof standard motors.

☞ **Guide value "Rise of voltage at output"**

When selecting **standard motors**, make sure that they comply with the occurring voltage load "rise of voltage at output" (see Data Sheet KMS).

Selecting Standard Motors

The table below shows the nominal powers P_{nenn} of standard motors which can be operated at the drive controller. The data are subject to the following conditions:

- Motor design:

  4-pole standard motor (2 pole pairs) with rated voltage 3 AC 400 V, 50 Hz at mains voltage U_{LN} ≥ 3 AC 400 V or
- Operation at minimum switching frequency $f_s = f_s$ (min.)
- Rotary field at output with $f_{out} > f_{out_still}$
- Overload ratio K = P_{DC_peak} / P_{DC_base} according to performance profile "UEL_P_e"

☞ Observe the performance data P_{DC_peak} and P_{DC_base} in the performance profile "UEL_P_e" of the supply unit and the performance data of the electronic control system KCU.

Selecting Standard Motors 3 AC 400 V - Exemplary Profiles

Description	Symbol	Unit	KMS01.2B-A018 Preliminary
Nominal power standard motor 3 AC 400 V; 50 Hz; t > 10 min; K = 1,0; f_s = 4 kHz[1)]	P_{Nenn}	kW	≤ 2,2
Nominal power standard motor 3 AC 400 V; 50 Hz; t = 60 s; T = 10 min; K = 1,1; f_s = 4 kHz[2)]	P_{Nenn}	kW	≤ 2,2

Courtesy of CMA/Flodyne/Hydradyne ▪ Motion Control ▪ Hydraulic ▪ Pneumatic ▪ Electrical ▪ Mechanical ▪ (800) 426-5480 ▪ www.cmafh.com

Description	Symbol	Unit	KMS01.2B-A018 Preliminary
Nominal power standard motor 3 AC 400 V; 50 Hz; t = 60 s; T = 5 min; K = 1.5; f_s = 4 kHz[3)]	P_{Nenn}	kW	≤ 1,5
Nominal power standard motor 3 AC 400 V; 50 Hz; t = 2 s; T = 20 s; K = 2,0; f_s = 4 kHz[4)]	P_{Nenn}	kW	≤ 1,5

1) 2) 3) 4) See definition profile UEL_P_e; 1 kW ~ 1.36 hp

Fig.7-13: KMS - Selecting Standard Motors 3 AC 400 V - Exemplary Profiles

Performance Profile "UEL_P_e"

The following performance profiles have been defined for converters and inverters.

☞ Observe the allowed performance data P_{DC_peak} and P_{DC_base} in the corresponding performance profile of the supply unit or converter.

Profile	Explanation
Performance profile "UEL_P_e" 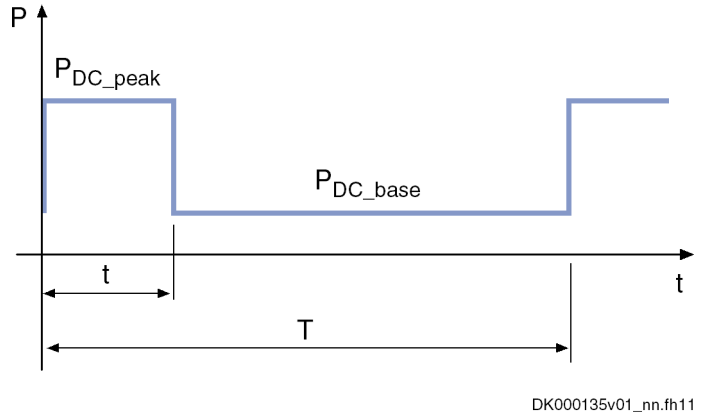	Characteristic of the selection of standard motors and servo drives.

Fig.7-14: Definition of Performance Profiles, Infeeding Supply Units and Converters

7.2 Notes on Electrical Project Planning

7.2.1 SERCOS Address Selector Switches

⚠ WARNING **High electrical voltage! Danger to life by electric shock!**

Before examining the address which has been set, always switch power off and then remove connector.

The SERCOS address must be set at each KSM/KMS. To do this, use the two turn-switches S5 and S4 which are to be found under the connector covers of X3.1 and X3.2.

Courtesy of CMA/Flodyne/Hydradyne ▪ Motion Control ▪ Hydraulic ▪ Pneumatic ▪ Electrical ▪ Mechanical ▪ (800) 426-5480 ▪ www.cmafh.com

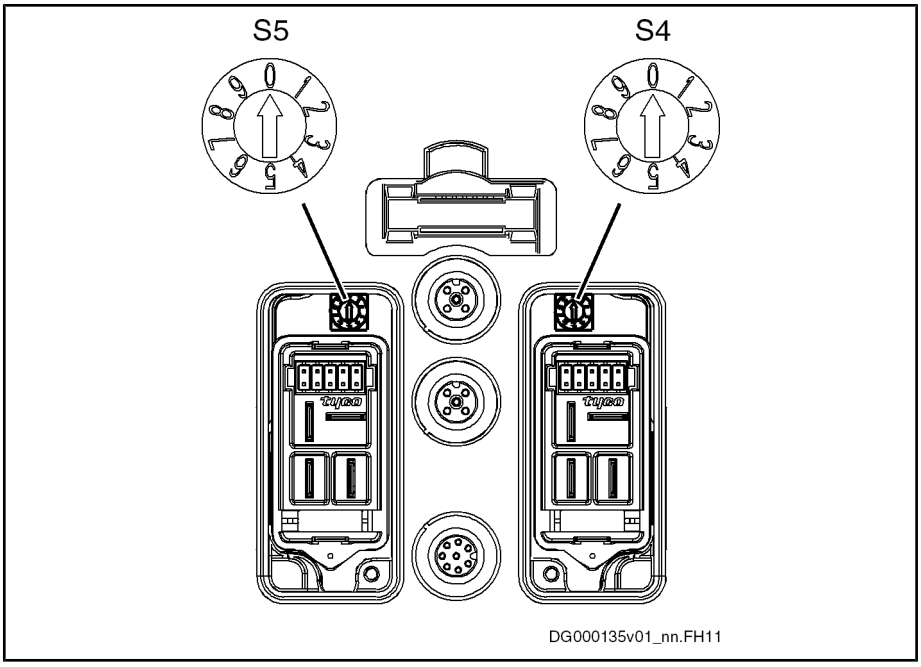

S5 SERCOS address selector switch (×10)
S4 SERCOS address selector switch (×1)
Fig.7-15: SERCOS Address Selector Switches

Setting	Description
"00" S5 = 0 S4 = 0	"00" is the factory setting of the address selector switches. This setting is **not** applied. You have to set the individual drive address in parameter "P-0-4025, Drive address of master communication", e.g. via the serial interface X2. The factory setting in P-0-4025 is "01".
"01" … "99" S5 = 0 … 9 S4 = 0 … 9 Drive address = S5×10 + S4	Setting of address selector switches is applied to P-0-4025. Example for setting drive address "14": S5 = 1, S4 = 4 ⇒ drive address = 1×10 + 4 = 14
See also documentation Parameter Description: ● "P-0-4025, Drive address of master communication" ● "P-0-4031, Overview of device addresses"	

Fig.7-16: Setting the Drive Address at S4 and S5

☞ **Order in string of drives**
The order of the addresses in a string is without significance.

7.2.2 Motor Current Limitation

The current limitation makes sure that neither controller nor motor are damaged by overload, as long as the motor temperature remains below 100 °C. When the housing temperature of 100 °C is exceeded, overtemperature shutdown takes place.

Courtesy of CMA/Flodyne/Hydradyne ▪ Motion Control ▪ Hydraulic ▪ Pneumatic ▪ Electrical ▪ Mechanical ▪ (800) 426-5480 ▪ www.cmafh.com

With a load of more than 200%, the I2t limitation takes effect. It limits the temperature of winding and electronic system to the safe working range.

In standstill (turning shaft n < ~60 min^{-1}), the current is limited in a more restrictive way, due to the concentration of losses in one phase. For bigger motors, the continuous torque at standstill can be less than 200% of the continuous torque at standstill 60 K.

The limitation starts at 100% of thermal drive load. To have reserve capacity (e.g. for dynamic processes or increased friction), you should dimension the drive system with less than 80% of thermal drive load. You have to check the drive load during initial commissioning.

See also "P-0-0141, Thermal drive load"

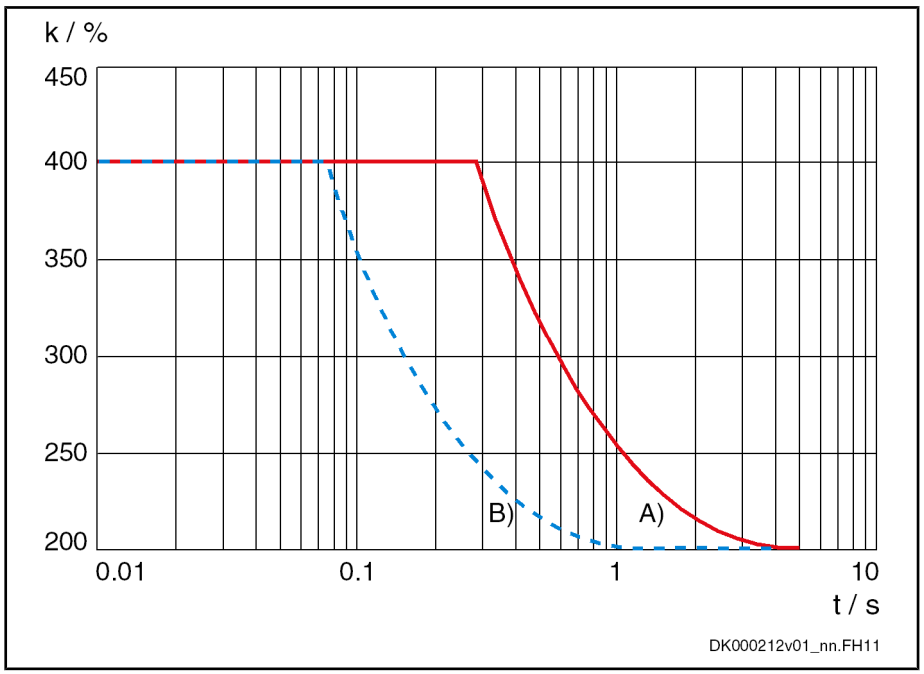

k	Overload ratio
1	Turning shaft n > ~ 60 min-1
2	Turning shaft n < ~ 60 min-1

Fig.7-17: Current Limitation Using the Example of KSM01.2B-041C-42

7.2.3 Motor Temperature

As the electronic system is thermally connected to the motor housing, the amplifier temperature is the most important variable for the load. This temperature is measured and can be read as parameter "S-0-0384, Amplifier temperature". It is slightly higher than the housing temperature and must not exceed 100 °C. Operation under rated conditions causes temperature rise of 60 K.

When 105 °C are exceeded, the motor temperature warning is generated; after 30 seconds, power is switched off.

The motor has been correctly dimensioned, when the difference between amplifier temperature read from the parameter and ambient temperature remains at less than 60 K in operation.

See also "S-0-0384, Amplifier temperature".

7.2.4 Switching Frequency

The nominal values refer to a switching frequency of 4 kHz. Operation with 8 kHz is possible, but should be avoided where possible. Continuous torque

Courtesy of CMA/Flodyne/Hydradyne ▪ Motion Control ▪ Hydraulic ▪ Pneumatic ▪ Electrical ▪ Mechanical ▪ (800) 426-5480 ▪ www.cmafh.com

and peak torque are considerably reduced and the higher basic losses cause higher motor temperature rise already in no-load operation.

See also "P-0-0001, Switching frequency of the power output stage".

7.3 Notes on Mechanical Project Planning

7.3.1 Mounting Space

The mounting space must comply with both mechanical and thermal requirements. The mechanical requirements are complied with by taking the dimensions of the components and their attached constructions (e.g. cables) into account.

To comply with the thermal requirements, it must be possible to dissipate the power dissipation generated in the mounting space (e.g. control cabinet) while the (local) ambient temperature does not exceed the allowed ambient temperature T_{a_work}.

Observe the minimum mounting clearances (dimensions) specified in the dimensional drawings.

Ventilation of KCU

Take the air intake and air outlet into account for ventilation.

Observe the data d_{top}, d_{bot} and d_{hor} in the data sheet of KCU.

Mounting Space of KSM, KMS

Make sure there is sufficient heat dissipation (e.g. ventilation, surface) in the mounting space, particularly in the case of "closed" mounting situations. Make sure that the cooling air can freely circulate around the housing surface to avoid pockets of heat. Keep the nub structure at the housing surface, which has a cooling effect, free from insulating dirt.

7.3.2 Output Shaft

Plain Shaft

The recommended standard design provides a friction-locked shaft-hub connection without backlash and excellent running smoothness. Use clamping sets, clamping sleeves or clamping elements to couple the machine elements to be driven.

Output Shaft With Key

The optional key according to DIN 6885, sheet 1, edition 08-1968, permits keyed transmission of torques with constant direction, with low requirements to the shaft-hub connection.

Courtesy of CMA/Flodyne/Hydradyne ▪ Motion Control ▪ Hydraulic ▪ Pneumatic ▪ Electrical ▪ Mechanical ▪ (800) 426-5480 ▪ www.cmafh.com

Courtesy of CMA/Flodyne/Hydradyne ▪ Motion Control ▪ Hydraulic ▪ Pneumatic ▪ Electrical ▪ Mechanical ▪ (800) 426-5480 ▪ www.cmafh.com

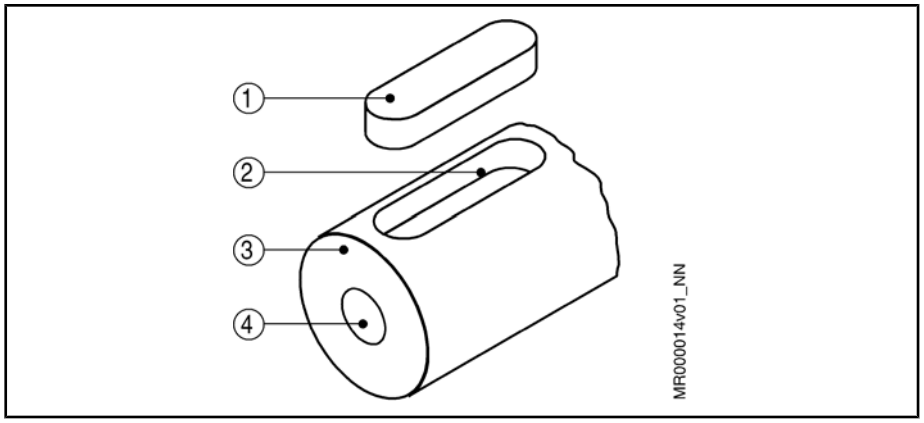

1 Key
2 Keyway
3 Motor shaft
4 Centering hole

Fig.7-18: Output Shaft With Key

The machine elements to be driven must additionally be secured in the axial direction via the centering hole on the end face.

NOTICE **Damage to the shaft! In case of intense reversing duty, the seat of the key may wear out. Increasing deformations in this area can then lead to breakage of the shaft!**

Preferably use plain output shafts.

Balancing With the Complete Key

The motors have been balanced with the **complete** key. This means that the machine element to be driven must be balanced without a key.

☞ Modifications to the keys may be made only by the users themselves and on their own responsibility. Rexroth does not provide any warranty for modified keys or motor shafts.

Output Shaft With Shaft Sealing Ring

The motors have been designed with radial shaft sealing rings according to DIN 3760 - design A.

Courtesy of CMA/Flodyne/Hydradyne ▪ Motion Control ▪ Hydraulic ▪ Pneumatic ▪ Electrical ▪ Mechanical ▪ (800) 426-5480 ▪ www.cmafh.com

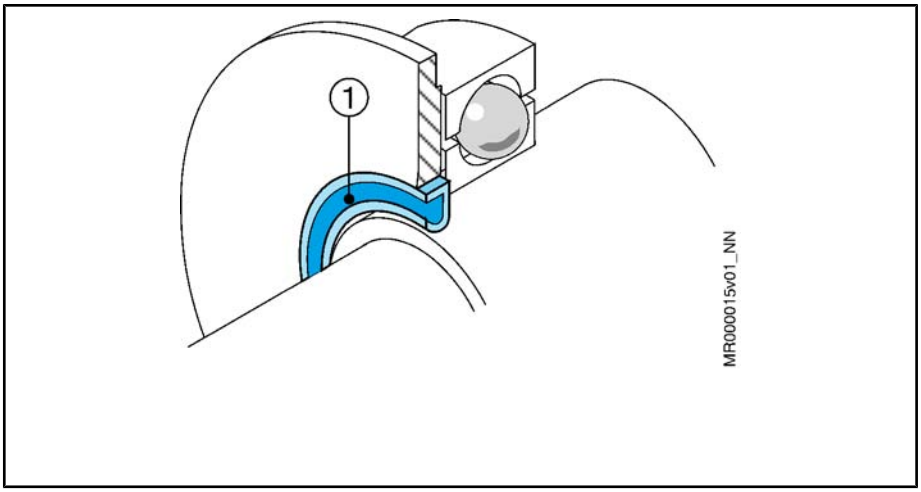

1 Radial shaft sealing ring

Fig.7-19: Radial Shaft Sealing Ring

Wear

Radial shaft sealing rings are rubbing seals. This means that they are subject to wear and generate frictional heat.

Wear of the rubbing seal can be reduced only if lubrication is adequate and the sealing point is clean. Here, the lubricant also acts as a coolant, supporting the discharge of frictional heat from the sealing point.

- Prevent the sealing point from becoming dry and dirty. Always ensure adequate cleanliness.

Resistance

The materials used for the radial shaft sealing rings are highly resistant to oils and chemicals. The suitability test for the particular operating conditions lies, however, within the machine manufacturer's responsibility.

☞ The complex interactions between the sealing ring, the shaft and the fluid to be sealed, as well as the particular operating conditions (frictional heat, soiling, etc.), do not allow calculating the lifetime of the shaft sealing ring.

Vertical Mounting Positions IM V3

The degree of protection on the flange side of motors with a shaft sealing ring is IP 65. Therefore, tightness is ensured only in case of splashing fluids. Fluid levels present on side A require a higher degree of protection. If the motor is mounted in vertical position (output shaft pointing up), there mustn't any fluid be present at the output shaft.

Note on Design

Rexroth recommends that any direct contact of the output shaft and the radial shaft sealing ring with the processing medium (coolant, material corrosion) should be avoided by the machine or installation design.

7.3.3 Bearings and Shaft Load

General Information

During operation, both radial and axial forces act upon the motor shaft and the motor bearings. The design of the machine, the selected motor type and the attachment of driving elements on the shaft side must be adapted to one another to ensure that the specified load limits are not exceeded.

Radial Load, Axial Load

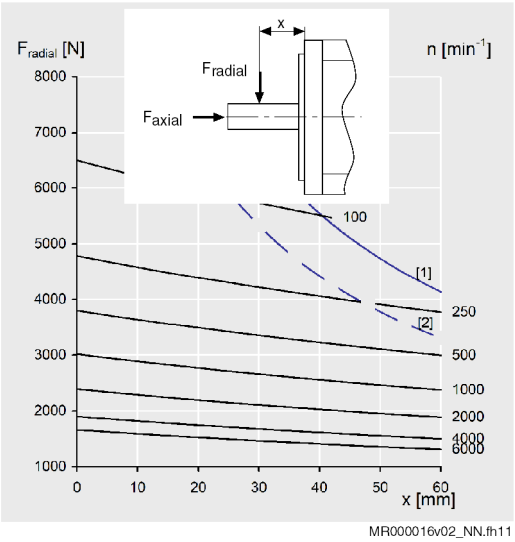

Fig.7-20: Exemplary Diagram of Shaft Load

Maximum Allowed Radial Force F_{radial_max}

The maximum allowed radial force F_{radial_max} depends on the following factors:

- Shaft break load
- Point of application of force x
- Shaft design (plain; with keyway)

Allowed Radial Force F_{radial}

The allowed radial force F_{radial} depends on the following factors:

- Arithmetic mean speed (n_{mean})
- Point of application of force x
- Bearing service life

Allowed Axial Force F_{axial}

The maximum allowed axial force F_{axial} is specified in the technical data.

Average Speed

The run-up and braking times can be ignored in the calculation, if the time in which the drive is operated at a constant speed is significantly greater than the acceleration and braking time. In the exact calculation of the average speed according to the following example, the run-up and braking times are taken into account.

Courtesy of CMA/Flodyne/Hydradyne ▪ Motion Control ▪ Hydraulic ▪ Pneumatic ▪ Electrical ▪ Mechanical ▪ (800) 426-5480 ▪ www.cmafh.com

Courtesy of CMA/Flodyne/Hydradyne ▪ Motion Control ▪ Hydraulic ▪ Pneumatic ▪ Electrical ▪ Mechanical ▪ (800) 426-5480 ▪ www.cmafh.com

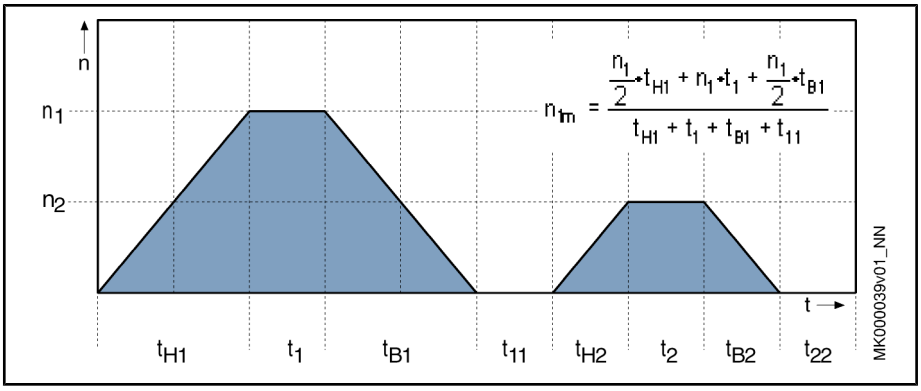

n_{1m}; n_{2m}	Average speed phase x
n_1; n_2	Processing speed
t_{H1}; t_{H1}	Run-up time
t_1; t_2	Processing time
t_{B1}; t_{B2}	Braking time
t_{11}; t_{22}	Standstill time

Fig.7-21: Average Speed

A complete processing cycle can consist of several phases with different speeds. In this case, the average is to be generated from all phases.

Bearing Service Life

The bearing service life is an important criterion for the availability of the motors. When the bearing service life is considered, the "mechanical service life" of bearing components and materials is differentiated from the "grease service life" of the bearing lubricant.

Mechanical Bearing Service Life

L_{10h} = 30 000 operating hours

(Calculated according to ISO 281, ed. 12/1990)

This applies to all motors based on the following facts:

- The allowed loads are never exceeded.
- The motor is operated under the allowed operating conditions and in the allowed ambient temperature range of 0 to +40 °C.

NOTICE **Risk of damage by inadmissible loads!**

Possible consequences of inadmissible loads:

- Premature failure of the bearings due to increased wear or mechanical damage.
- Premature failure of the bearings due to reduced grease service life.

Avoid exceeding the load limits.

Mechanical Bearing Service Life at Increased Radial Force

Otherwise, the bearing service life is reduced as follows:

$$L_{10h} = \left(\frac{F_{radial}}{F_{radial_ist}}\right)^3 \cdot 30000$$

L_{10h}	Bearing service life (according to ISO 281, ed. 12/1990)
F_{radial}	Determined allowed radial force in N (newton)
F_{radial_ist}	Actually acting radial force in N (newton)

Fig.7-22: Calculating the Bearing Service Life L10h if the Allowed Radial Force F_{radial} is Exceeded

☞ Under no circumstances may the actually acting radial force F_{radial_act} be higher than the maximum allowed radial force F_{radial_max}.

7.3.4 Holding Brakes

Brake Control and Supply

The integrated holding brake is supplied from the control voltage U_{N3}. It can only be switched via the firmware or SERCOS commands. It is an electrically releasing holding brake. For commissioning purposes, the holding brake can be activated via input X2.

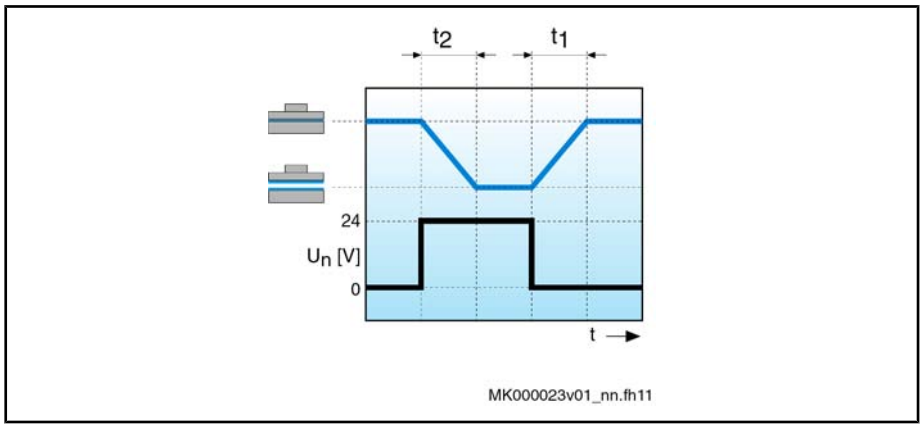

t_1 Clamping delay
t_2 Release delay
Fig.7-23: Holding Brake Diagram

The holding brake mustn't be used to stop the turning motor during normal operation! The holding brake mustn't be used for safety-relevant purposes either.

☞ Holding brakes are available as an option. The supplied holding brake has been adapted to the corresponding motor!

Safety Requirements

In **normal operation**, use the brake only when at standstill and when performing the drive-integrated brake check. The holding brake is required for holding the axis when the machine is in a de-energized state.

Observe the safety requirements during the system design:

Courtesy of CMA/Flodyne/Hydradyne ▪ Motion Control ▪ Hydraulic ▪ Pneumatic ▪ Electrical ▪ Mechanical ▪ (800) 426-5480 ▪ www.cmafh.com

Courtesy of CMA/Flodyne/Hydradyne ▪ Motion Control ▪ Hydraulic ▪ Pneumatic ▪ Electrical ▪ Mechanical ▪ (800) 426-5480 ▪ www.cmafh.com

⚠ WARNING **Dangerous movements! Danger to persons from falling or dropping axes!**

Observe supplementary standards and guidelines. For European countries:

- DIN EN 954 / 03.97 Safety-related parts of control systems

- Information Sheet for vertical axes

Published by the institution for statutory accident insurance and prevention, technical committee iron and metal II:

Süddeutsche Metall-Berufsgenossenschaft

Fachausschuss Eisen und Metall II

Wilhelm-Theodor-Römheld-Str. 15

55130 Mainz

USA: See National Electrical Code (NEC), National Electrical Manufacturers' Association (NEMA), as well as local engineering regulations.

Generally, the following applies: Observe the national regulations!

⇒ The serially delivered motor holding brake is not sufficient to guarantee personal safety!

⇒ Personnel safety must be achieved using higher-ranking, fail-safe procedures.

⇒ Dangerous areas should be blocked off with protective fences or grids.

⇒ Additionally secure vertical axes against falling or dropping after switching off the motor power by, for example:

- Mechanically securing the vertical axes
- Adding an external braking/arrester/clamping mechanism or
- Ensuring sufficient counterbalancing of the vertical axes
- Other appropriate measures

Controlling the Holding Brake

The control electronics controls the integrated holding brake which excludes user errors.

☞ For the purpose of commissioning, release the holding brake via connection point X2 by connecting the contacts X2.1 and X2.2.

Function Check

Before commissioning and in operation, check the holding brake for its function in periodic intervals (e.g. every 8 hours) with an appropriate check. By applying a defined torque to the motor, check whether the holding brake has completely released. For additional information and data, see Functional Description of firmware (index entry "Motor holding brake → Function check").

Electrically Releasing Holding Brake

The **electrically releasing** holding brake is used to hold the axes at standstill and when the drive enable signal is off. When the supply voltage fails and the drive enable signal has been switched off, the **electrically releasing** holding brake will automatically apply.

NOTICE **Risk of damage!**

Do not use the holding brake as a service brake for moving axes.

Courtesy of CMA/Flodyne/Hydradyne ▪ Motion Control ▪ Hydraulic ▪ Pneumatic ▪ Electrical ▪ Mechanical ▪ (800) 426-5480 ▪ www.cmafh.com

Sizing Holding Brakes

The physical conditions of holding brakes require consideration of two states. In addition to normal operation, failures must be considered. The effective braking torques are physically different:

Normal Operation

In **normal operation**, using the holding brake for clamping (holding) an axis in standstill, the "static holding torque" (M4) – static friction (friction coefficient μ_H) specified in the data sheets takes effect.

Failure (E-Stop)

In the case of **failure (E-Stop)**, where the holding brake is used to decelerate a moving axis, the "dynamic braking torque" – sliding friction (friction coefficient μ_G) applies.

The dynamic braking torque is lower than the indicated static holding torque M4. It is approx. 0.75 … 0.8 x M4. Therefore, observe the following description of dynamic sizing.

Dynamic Sizing

The load torque must be lower than the minimum dynamic torque which the brake can provide. Otherwise, the dynamic brake torque is not sufficient to stop the axis.

If a mass is to be decelerated in a defined time or over a defined distance, the mass inertia of the whole system must be additionally taken into account.

Other Important Aspects for Sizing

The holding brake is not a safety brake (cf. DIN EN 954 / 03.97 and Information Sheet for vertical axes published by the institution for statutory accident insurance and prevention ["Süddeutsche Metall-Berufsgenossenschaft"]). Due to uncontrollable disturbances, such as film rust on the brake friction surface, the holding brake torque can be reduced. Additionally, overvoltage and too high temperatures can weaken the permanent magnets and the brake.

Sizing - Recommendation

Considering these factors, the following recommendation can be given for sizing holding brakes at axes:

The holding torque required for the application must not exceed a maximum of 60% of the static holding torque (M4) of the holding brake used.

NOTICE **Holding torque reduction and premature wear occur when braking moving axes!**

Do not use the holding brake to stop a moving axis during normal operation. This is allowed for E-Stop situations only. In this situation, the specified rated torque of the holding brake (M4) is reduced to the dynamic braking torque. Complete deterioration of the holding brake can be expected after approx. 20,000 revolutions of the brake when applied.

Observe the commissioning instructions for holding brakes (see index entry "Holding brake → Commissioning"). See also Functional Description of firmware (index entry "Motor holding brake → Operating behavior").

7.3.5 Mechanical Attachment of Driving Elements

General Information

For all attachments of driving elements to the output shaft (e.g. gears, couplings, pinions), you absolutely have to observe the following instructions.

Redundant Bearings

Generally, redundant bearings are to be avoided by all means when attaching driving elements. The tolerances inevitably present in such cases will lead to additional forces acting on the bearing of the motor shaft and, should the occasion arise, to a distinctly reduced service life of the bearing.

Courtesy of CMA/Flodyne/Hydradyne ▪ Motion Control ▪ Hydraulic ▪ Pneumatic ▪ Electrical ▪ Mechanical ▪ (800) 426-5480 ▪ www.cmafh.com

☞ If redundant attachment cannot be avoided, it is absolutely necessary that you consult Rexroth.

Gear Attachment

The machine design and the attachment elements used must be carefully adapted to the motor type so that the load limits of shaft and bearing are not exceeded.

When gears are attached to motors, this changes the thermal connection of the motor to the machine or installation design.

According to the gear type, the heat generation at the gear is different. In any case, gear attachment reduces the heat dissipation of the motor via the flange. This has to be taken into account when doing the project planning for the installation.

To avoid thermal overload of motors when using gears, it is necessary to reduce the specified performance data.

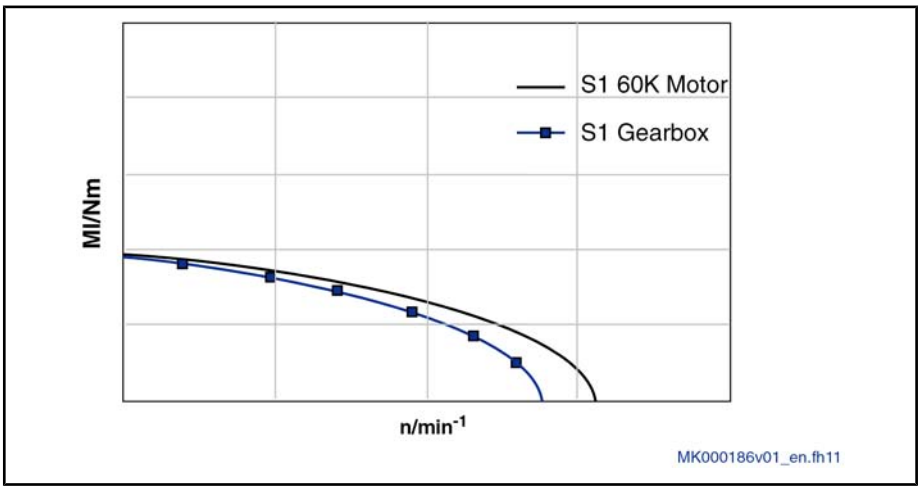

Fig.7-24: S1 Characteristic of Gear

☞ The torques indicated in the motor characteristics have to be reduced by approx. **10–20%** when gears are attached.

Observe all other notes and requirements contained in the documentations on the gears used.

Coupling Attachment

The machine design and the attachment elements used must be carefully adapted to the motor type so that the load limits of shaft and bearing are not exceeded.

NOTICE **Risk of damage!**

When connecting extremely stiff couplings, the radial force which constantly changes the angular position may cause an impermissibly high load on the shaft and bearing.

Bevel Gear Pinions or Skew Bevel Driving Pinions

Owing to thermal effects, the flange-side end of the output shaft may shift by up to 0.6 mm in relation to the motor housing. If skew bevel driving pinions or

bevel gear pinions directly attached to the output shaft are used, this change in position will lead to

- a shift in the position of the axis if the driving pinions are not defined axially on the machine side
- a thermally dependent component of the axial force if the driving pinions are defined axially on the machine side.

  This causes the risk of exceeding the maximum allowed axial force or of the backlash within the gears increasing to an impermissible degree.

☞ In such cases, you should therefore preferably use drive elements with their own bearings which are connected to the motor shaft via axially compensating couplings.

Courtesy of CMA/Flodyne/Hydradyne ▪ Motion Control ▪ Hydraulic ▪ Pneumatic ▪ Electrical ▪ Mechanical ▪ (800) 426-5480 ▪ www.cmafh.com

Courtesy of CMA/Flodyne/Hydradyne ▪ Motion Control ▪ Hydraulic ▪ Pneumatic ▪ Electrical ▪ Mechanical ▪ (800) 426-5480 ▪ www.cmafh.com

Courtesy of CMA/Flodyne/Hydradyne ▪ Motion Control ▪ Hydraulic ▪ Pneumatic ▪ Electrical ▪ Mechanical ▪ (800) 426-5480 ▪ www.cmafh.com

8 Identification

8.1 Scope of Supply

8.1.1 KCU

Standard	Optional
KCU	Basic accessory HAS01.1-050 [1)]
Instruction Manual (in the English language)	Connection accessory HAS02.1-015 for strain relief and shield connection [1)]
	Mounting accessory HAS03 [1)]

1) For more information on HAS accessory: See Project Planning Manual "Rexroth IndraDrive Additional Components and Accessories"

Fig.8-1: Scope of Supply KCU

8.1.2 KSM

Standard	Optional
KSM	RKB0006 (interface cable X2 ↔ PC)
PFM02 (Memory card module [MultiMediaCard])	RKS0010 (interface cable X37 or X38 ↔ Control unit)

Fig.8-2: Scope of Supply KSM

8.1.3 KMS

Standard	Optional
KMS	RKB0006 (interface cable X2 ↔ PC)
PFM02 (Memory card module [MultiMediaCard])	RKS0010 (interface cable X37 or X38 ↔ Control unit)

Fig.8-3: Scope of Supply KMS

8.2 Identifying and Checking the Delivered Components

8.2.1 Type Plate KSM

Arrangement

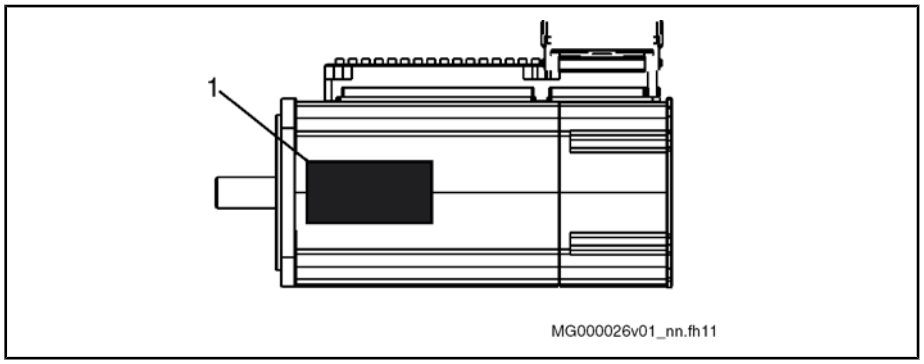

1 Type plate

Fig.8-4: Type Plate Arrangement

Courtesy of CMA/Flodyne/Hydradyne ▪ Motion Control ▪ Hydraulic ▪ Pneumatic ▪ Electrical ▪ Mechanical ▪ (800) 426-5480 ▪ www.cmafh.com

Identification

Design

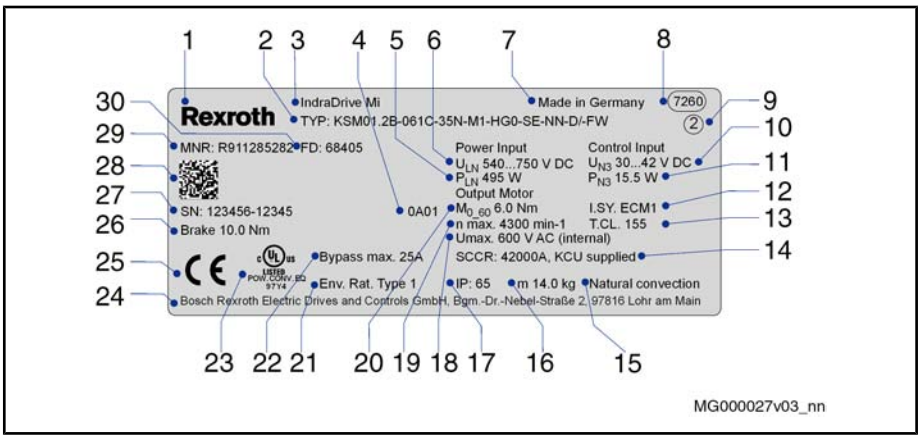

1	Trademark
2	Type designation
3	IndraDrive Mi
4	Hardware revision index
5	Rated power (t > 10 min)
6	Rated input voltage, power (UL)
7	Country of manufacture
8	Manufacturing plant
9	Manufacturer code
10	Rated control voltage input (UL)
11	Rated power consumption control voltage input at U_{N3} (UL)
12	Insulation system
13	Insulation class according to DIN EN 60034-1
14	Short circuit current rating (UL)
15	Cooling type
16	Mass
17	Degree of protection according to IEC60529
18	Max. connecting voltage
19	Maximum speed
20	Continuous torque at standstill 60 K
21	Ambient conditions according to UL50/50E
22	Maximum bypass current (UL)
23	UL label
24	Company address
25	CE conformity label
26	Holding brake torque (optional)
27	Serial number
28	2-D bar code
29	Part number
30	Production week; example 09W26: year 2009, week 26

Fig.8-5: Type Plate

8.2.2 Type Plate KMS

Arrangement

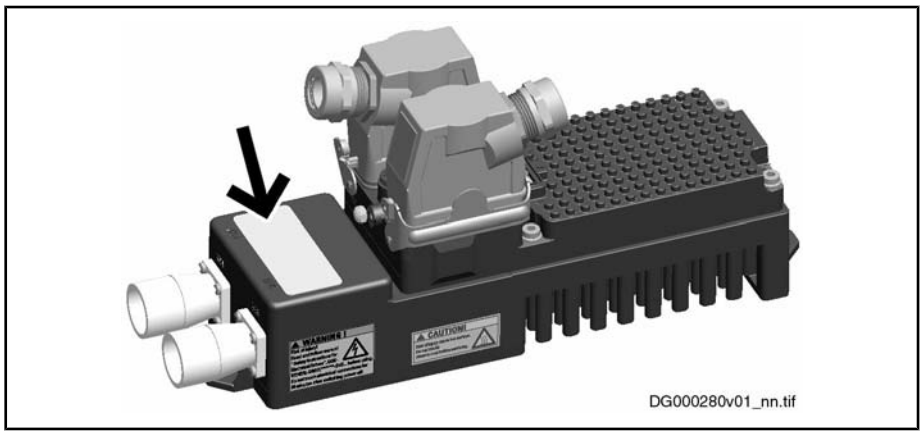

Fig.8-6: Type Plate Arrangement

Courtesy of CMA/Flodyne/Hydradyne ▪ Motion Control ▪ Hydraulic ▪ Pneumatic ▪ Electrical ▪ Mechanical ▪ (800) 426-5480 ▪ www.cmafh.com

Courtesy of CMA/Flodyne/Hydradyne ▪ Motion Control ▪ Hydraulic ▪ Pneumatic ▪ Electrical ▪ Mechanical ▪ (800) 426-5480 ▪ www.cmafh.com

Identification

Design

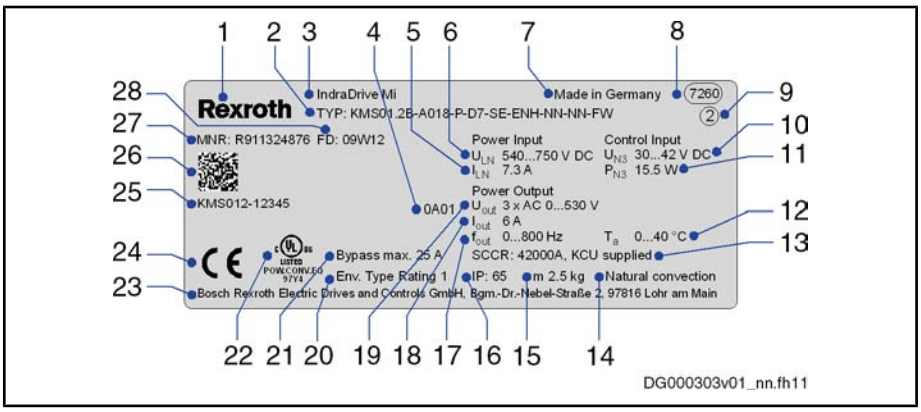

1	Trademark
2	Type designation
3	Drive range
4	Hardware revision index
5	Nominal current
6	Rated input voltage, power (UL)
7	Country of manufacture
8	Manufacturing plant
9	Manufacturer code
10	Rated control voltage input (UL)
11	Rated power consumption control voltage input at U_{N3} (UL)
12	Allowed ambient temperature
13	Short circuit current rating (UL)
14	Cooling type
15	Mass
16	Degree of protection according to IEC60529
17	Output frequency range
18	Output current
19	Output voltage
20	Ambient conditions according to UL50/50E
21	Maximum bypass current (UL)
22	UL label
23	Company address
24	CE conformity label
25	Part number
26	2-D bar code
27	Part number
28	Production week; example 09W12: year 2009, week 12

Fig.8-7: Type Plate KMS

8.2.3 Type Plate KCU

Arrangement

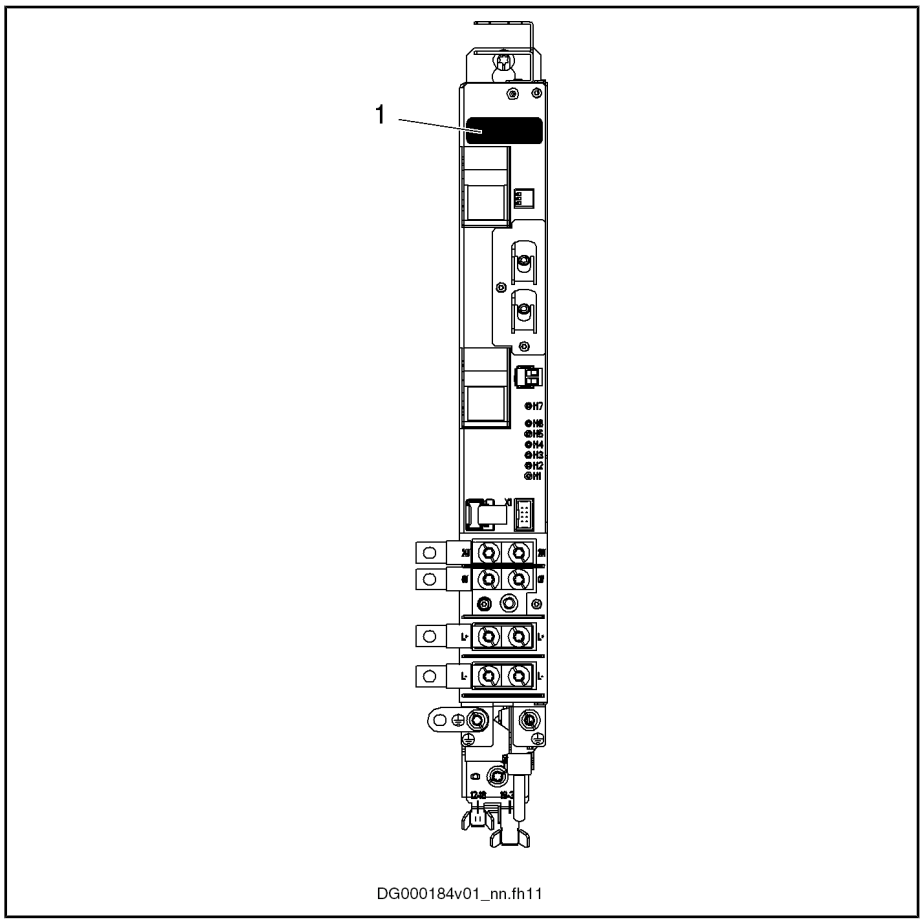

1 Type plate

Fig.8-8: Type Plate Arrangement

Design

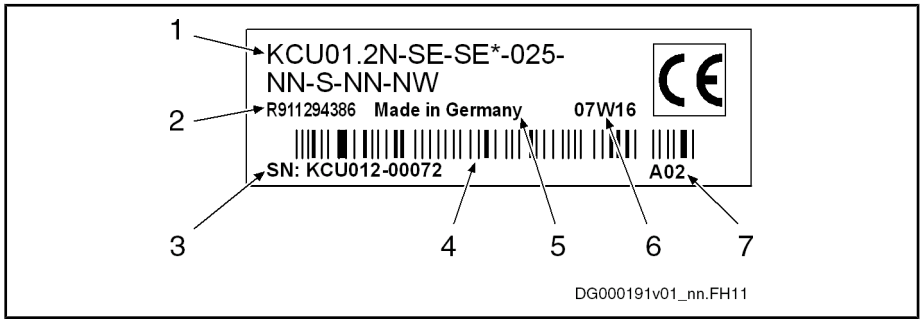

1 Device type
2 Part number
3 Serial number
4 Bar code
5 Country of manufacture
6 Production week; example 07W16: year 2007, week 16
7 Hardware revision index

Fig.8-9: Type Plate

Courtesy of CMA/Flodyne/Hydradyne ▪ Motion Control ▪ Hydraulic ▪ Pneumatic ▪ Electrical ▪ Mechanical ▪ (800) 426-5480 ▪ www.cmafh.com

Courtesy of CMA/Flodyne/Hydradyne ▪ Motion Control ▪ Hydraulic ▪ Pneumatic ▪ Electrical ▪ Mechanical ▪ (800) 426-5480 ▪ www.cmafh.com

Courtesy of CMA/Flodyne/Hydradyne ▪ Motion Control ▪ Hydraulic ▪ Pneumatic ▪ Electrical ▪ Mechanical ▪ (800) 426-5480 ▪ www.cmafh.com

9 Mounting and Installation

9.1 Introduction

9.1.1 Important Notes

Safety

⚠ WARNING **Injuries caused by live parts! Lifting of heavy loads!**

Install the motors only when they have been de-energized and are not connected electrically.

Use suitable tackles, protective equipment and protective clothing during transport.

Observe the safety instructions contained in the preceding chapters.

Carry out all working steps especially carefully. In this way, you minimize the risk of accidents and damages.

Qualified Technical Staff

Any work at the installation and the drives or in their vicinity may be carried out only by appropriately trained technical staff.

Make sure that all persons carrying out installation work, maintenance work or operational activities at the installation are adequately familiar with the contents of this documentation, as well as with all warnings and precautionary measures contained therein.

Qualified technical staff must be trained, instructed and qualified to switch electrical circuits and devices on and off in accordance with technical safety regulations, to ground them and to mark them. Qualified technical staff must possess appropriate safety equipment and have been trained in first aid.

Handling of the Devices

⚠ CAUTION **Damage or injuries and invalidation of the warranty due to improper handling!**

Avoid mechanical stressing, throwing, tipping or dropping of the products.

Use only suitable tackles.

Never lift the motor using the optional blower housing.

Use suitable protective equipment and protective clothing during transport, wear safety shoes.

Protect the products against dampness and corrosion.

At delivery, motors have protective sleeves and covers on the output shafts and on the flange sockets. During transport and storage, the protective sleeves must remain on the motor.

- Remove the protective sleeves just before mounting.
- Also use the protective sleeves if you return the goods.

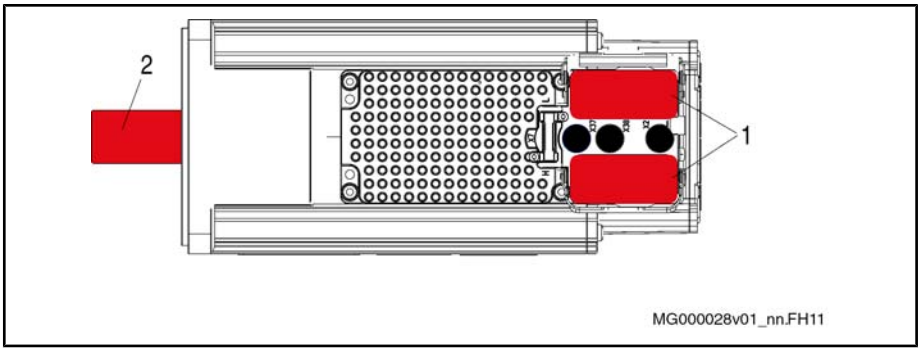

1 Transport protection
2 Protective sleeve for shaft
Fig.9-1: Protective Sleeves

- Avoid damage to the motor flange and drive shaft.
- Avoid impacts on the drive shaft.

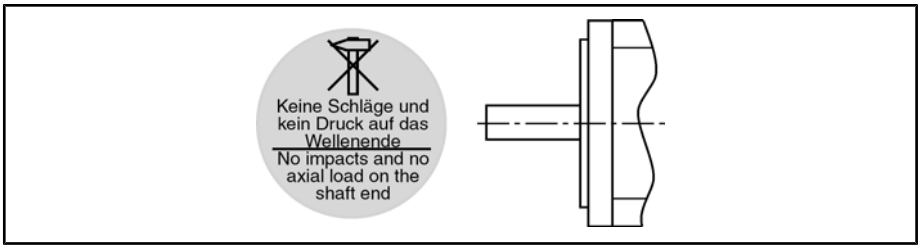

Fig.9-2: Handling the Shaft End

Impacts on the shaft end damage encoder and ball bearing! Driving elements, such as pulleys, coupling disks or toothed wheels, may only be mounted or dismounted by evenly heating up the driving elements or with the appropriate tool for mounting and dismounting.

9.1.2 System Overview

Available Connections

The electrical connections of all sizes of distributed servo drives KSM have been standardized.

The distributed servo drives KSM are provided with

- two **power connections** (hybrid connectors for power, control voltage, master communication and status messages) to loop through the bus cable
- two **I/O connectors** (M12, 5-pin)
- one **RS232** interface (M12, 8-pin)

Notes All connections have been designed as plug-in connectors. When you use the ready-made connection cables by Rexroth, this ensures easy, quick and error-safe mounting and commissioning.

☞ The connection diagram applies to all distributed servo drives KSM!

Courtesy of CMA/Flodyne/Hydradyne ▪ Motion Control ▪ Hydraulic ▪ Pneumatic ▪ Electrical ▪ Mechanical ▪ (800) 426-5480 ▪ www.cmafh.com

Courtesy of CMA/Flodyne/Hydradyne ▪ Motion Control ▪ Hydraulic ▪ Pneumatic ▪ Electrical ▪ Mechanical ▪ (800) 426-5480 ▪ www.cmafh.com

Overview of Cables and Connectors for Rexroth IndraDrive Mi:

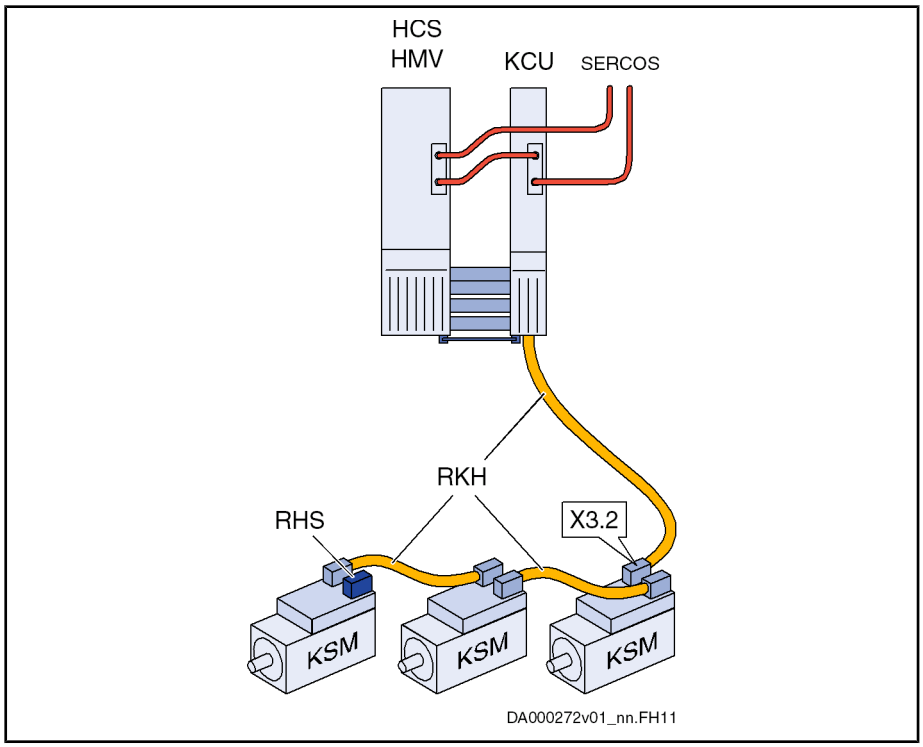

RKH	Hybrid cable
RHS	Terminal connector at last distributed servo drive KSM of a string of drives
X3.2	Connection point of hybrid cable at first distributed servo drive KSM of a string of drives

Fig.9-3: System Overview With Relevant Cable and Connector Designations

Courtesy of CMA/Flodyne/Hydradyne ▪ Motion Control ▪ Hydraulic ▪ Pneumatic ▪ Electrical ▪ Mechanical ▪ (800) 426-5480 ▪ www.cmafh.com

9.1.3 Connection Diagram KCU

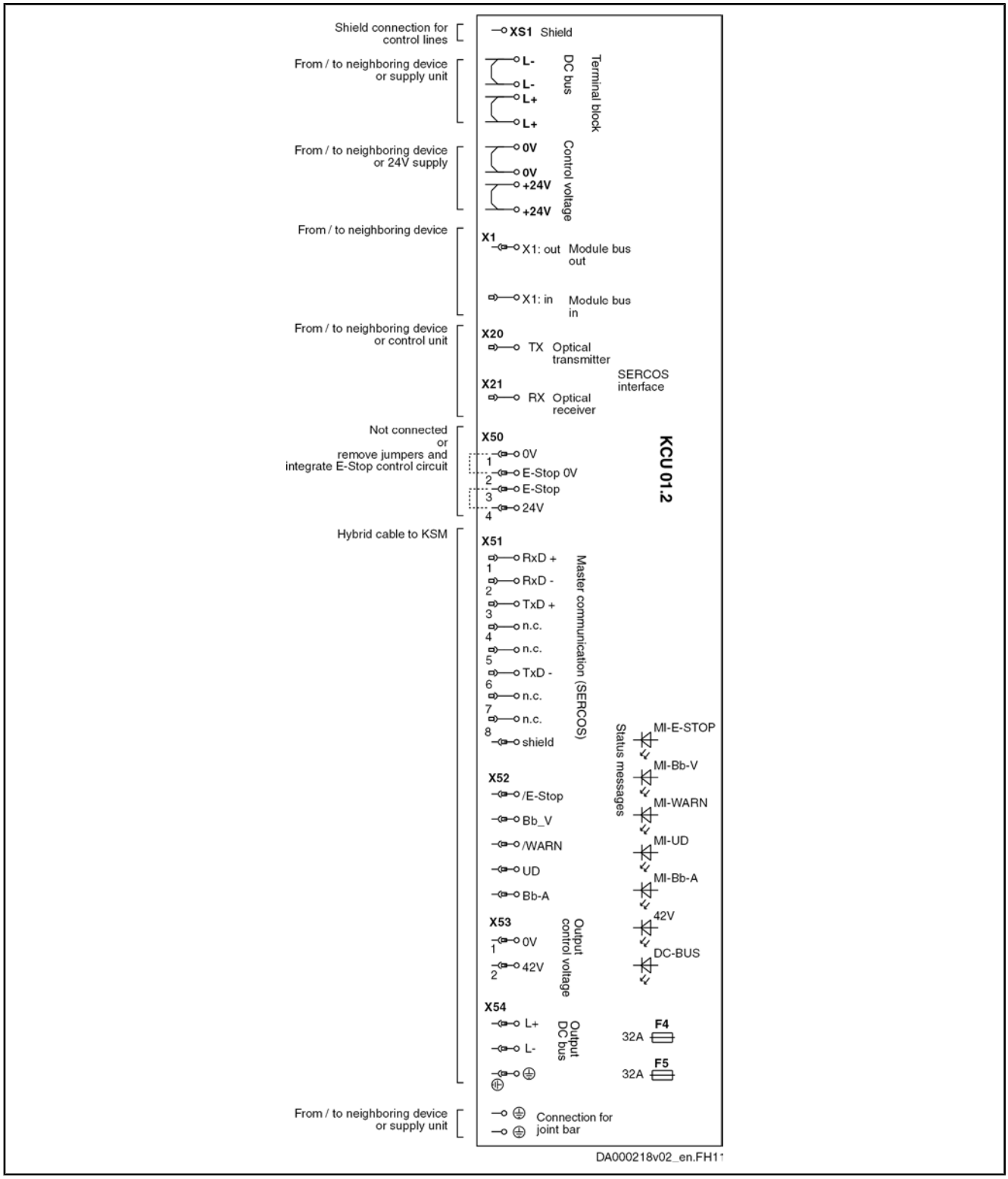

Fig.9-4: Connection Diagram KCU

9.2 KSM

9.2.1 Required Steps to Follow

Preparations

Make the following preparations for mounting:

1. Procure tools, auxiliary materials, measuring and test equipment.
2. Check all components for visible damage. Defective components mustn't be mounted.
3. Ensure that dimensions and tolerances on the installation side are suitable for motor attachment (for details, see dimensional drawing).
4. Check whether all components, mounting surfaces and threads are clean.
5. Ensure that mounting can be done in a dry and dust-free environment.
6. Ensure that the holder for the motor flange is without burrs.
7. Remove the protective sleeve of the motor shaft and keep it for further use.

If the Optional Holding Brake is Used

Check whether the motor holding brake attains the holding torque specified in the data sheet. If the holding brake does not attain the specified holding torque, check the functioning of the holding brake (see index entry "Holding brake → Commissioning").

Mounting KSM

Mounting for Easy Servicing

To allow trouble-free servicing, make sure that the following aspects are fulfilled after you have mounted KSM:

- Connection points X2, X37 and X38 can be easily accessed
- MMC slot X7 can be easily accessed
- SERCOS address selector switches S4 and S5 can be easily accessed
- Diagnostic LED H14 is visible

Notes on Mounting

- Avoid jamming or getting stuck of the centering collar on the motor side.
- Avoid damage to the insertion fitting on the installation side.
- Check the stability and precision of the connection before you proceed.

9.2.2 Mechanical Interfaces

Flange Mounting

Distributed servo drives KSM are manufactured for flange assembly (type of construction B05). Details for the mounting holes can be found in the corresponding dimensional drawing.

For flange mounting, we recommend using the screws and tightening torques listed in the table below.

Motor size	Recommended screw size	Tightening torque [Nm]	Minimum strength
KSM01.2B-041	M6	10,4	8.8
KSM01.2B-061	M8	25	8.8

Courtesy of CMA/Flodyne/Hydradyne ▪ Motion Control ▪ Hydraulic ▪ Pneumatic ▪ Electrical ▪ Mechanical ▪ (800) 426-5480 ▪ www.cmafh.com

Courtesy of CMA/Flodyne/Hydradyne ▪ Motion Control ▪ Hydraulic ▪ Pneumatic ▪ Electrical ▪ Mechanical ▪ (800) 426-5480 ▪ www.cmafh.com

Motor size	Recommended screw size	Tightening torque [Nm]	Minimum strength
KSM01.2B-071 KSM01.2B-076	M10	51	8.8
The screw specifications apply when screwed into steel; for other materials, determine the reach of the screws.			

Fig.9-5: Mounting Screws

☞ The screwed connections for flange assembly must be able to take up both the force due to weight of the motor and the forces acting during operation.

9.2.3 Practical Tips

⚠ WARNING **High electrical voltage! Danger to life by electric shock!**

Never remove live hybrid cable connectors (X3.1, X3.2).

Observe the following aspects for installation and mounting:

- The hybrid cable coming from the supply unit must be plugged in X3.2 of the first KSM/KMS of a string of drives.
- KSM/KMS have been equipped with two power connectors X3.1 and X3.2 which allow looping through the hybrid cable. According to the configuration, KSM/KMS is provided with a terminal connector at X3.1 or X3.2.

9.2.4 Electrical Connection

General Information

⚠ WARNING **High electrical voltage! Danger to life by electric shock!**

Handling within the range of live parts is extremely dangerous. Therefore:

- Any work required on the electric system may be carried out only by skilled electricians. It is absolutely necessary to use power tools.
- Before starting work, the system must be de-energized and the power switch be secured against unintentional or unauthorized re-energization.
- Before starting work, the appropriate measuring equipment must be used to check whether parts of the system are still under residual voltage (e.g. caused by capacitors, etc.). Wait to allow the system to discharge or use an appropriate discharging device (see chapter "Appendix").

⚠ WARNING **Personal injury or property damage by interrupting or connecting live lines!**

Interrupting or connecting live lines may cause unpredictable dangerous situations or lead to property damage. Therefore:

- Connect and disconnect plug-in connectors only when they are dry and de-energized.
- During operation of the installation, all plug-in connectors must be locked.

⚠ WARNING **Risk of short circuit caused by liquid coolant or lubricant!**

Short circuits of live lines may cause unpredictable dangerous situations or lead to property damage. Therefore:

- Provide exposed mating sides of power plug-in connectors with safety caps when installing or replacing drive components, if you cannot exclude that they might be moistened with liquid coolant or lubricant.

Notes

The motor cable is a hybrid cable in which the communication line has been integrated. Only the hybrid cable by Rexroth can ensure the function. It is supplied as ready-made cable. The outgoing direction of the hybrid cable cannot be changed subsequently!

NOTICE **Risk of damage by subsequently changing the outgoing direction of the hybrid cable!**

Do not try to reverse the cable outgoing direction of a ready-made connector! The flexible leads in the connector have individual lengths for each outgoing direction.

NOTICE **Risk of damage by leakage of the connection points!**

If vibrations act on the hybrid cable: Install strain relief near the connection points (X3.1, X3.2) so that there aren't any high vibration loads acting on the connectors. This can avoid possible leakage (entering liquid).

When ordering the ready-made hybrid cables, always indicate the desired outgoing direction: See index entry "Hybrid cables → Technical data".

Ready-made hybrid cables have been coded in such a way that X3.1 and X3.2 cannot be interchanged when connecting the cables.

Electrical Interfaces

Overall Connection Diagram

☞ At the **first** KSM/KMS, always plug the hybrid cable RKH in connection point **X3.2**.

Always terminate the unassigned connection at the **last** KSM/KMS with a **terminal connector RHS**.

The figures below show **examples**. Other possibilities of mains connection are described in the documentation "Rexroth IndraDrive, Drive Systems With HMV01/02, HMS01/02, HMD01, HCS02/03".

The **additional components** (DST, HNL, HNF …) contained in the figure are not absolutely necessary. As regards the detailed configuration of a drive system, see documentation "Rexroth IndraDrive, Drive Systems With HMV01/02, HMS01/02, HMD01, HCS02/03".

Courtesy of CMA/Flodyne/Hydradyne ▪ Motion Control ▪ Hydraulic ▪ Pneumatic ▪ Electrical ▪ Mechanical ▪ (800) 426-5480 ▪ www.cmafh.com

Courtesy of CMA/Flodyne/Hydradyne ▪ Motion Control ▪ Hydraulic ▪ Pneumatic ▪ Electrical ▪ Mechanical ▪ (800) 426-5480 ▪ www.cmafh.com

Drive System Rexroth IndraDrive Mi With HMV01 Supply Unit:

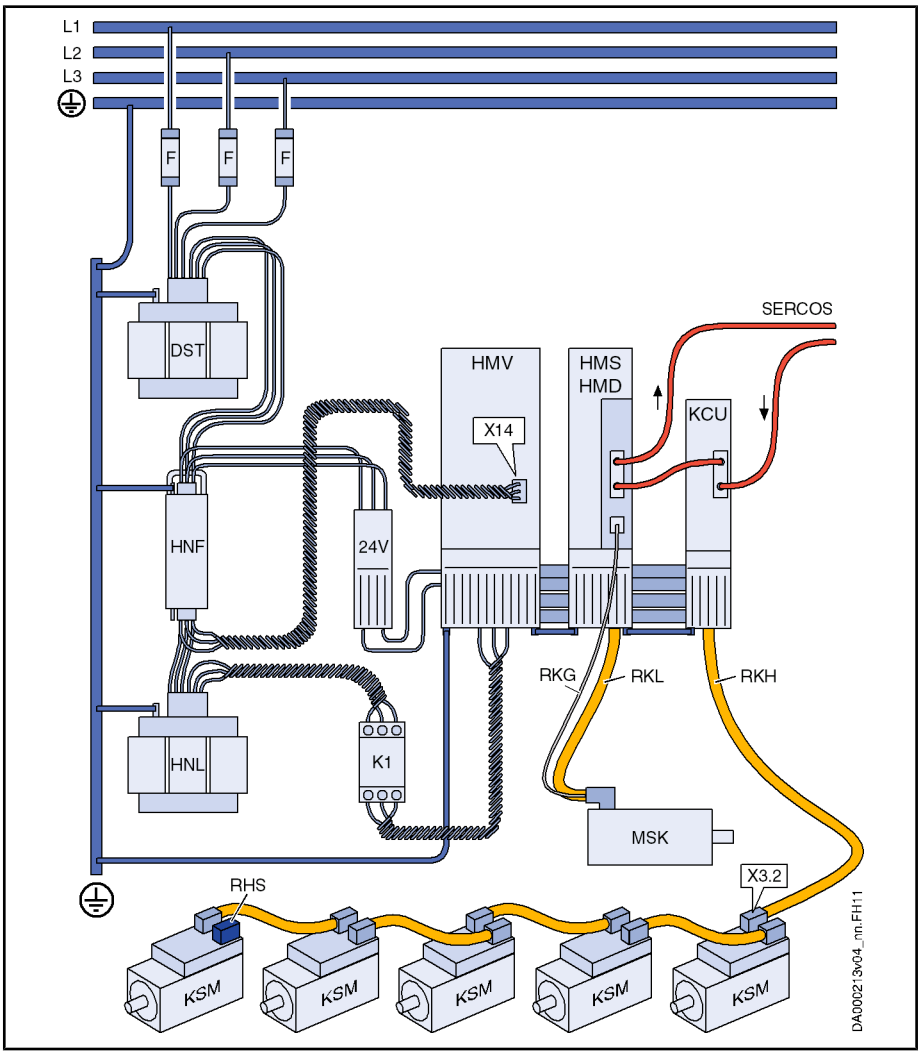

24V	24V supply
DST	Transformer (optional)
F	Fuses
HMD, HMS	Inverter (optional)
HMV01	Supply unit
HNF	Mains filter
HNL	Mains choke
K1	Mains contactor (only for supply units without integrated mains contactor, e.g. HMV01.1R-W0120)
KCU	Electronic control system
KSM	Distributed servo drive
MSK	Servo motor (optional)
RHS	Terminal connector
RKG	Encoder cable (optional)
RKH	Hybrid cable
RKL	Motor cable (optional)
X14	Mains synchronization (only with regenerative HMVs)
X3.2	Connection of hybrid cable RKH at first KSM

Fig.9-6: Drive System Rexroth IndraDrive Mi With HMV01

Courtesy of CMA/Flodyne/Hydradyne ▪ Motion Control ▪ Hydraulic ▪ Pneumatic ▪ Electrical ▪ Mechanical ▪ (800) 426-5480 ▪ www.cmafh.com

Drive System Rexroth IndraDrive Mi With HCS02 Supply Unit:

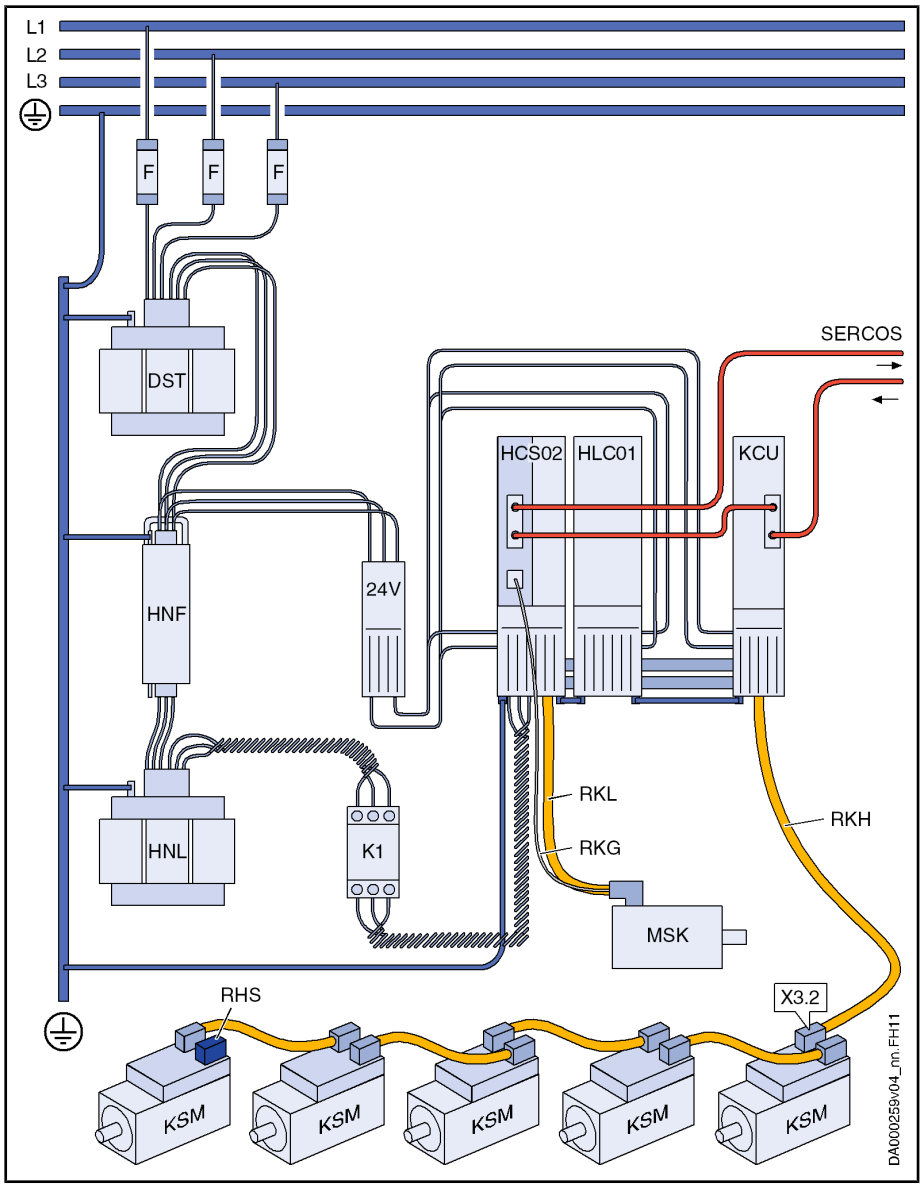

DST	Transformer (optional)
F	Fuses
HCS02	Converter (HCS02.1E-W0054 or HCS02.1E-W0070)
HNF	Mains filter
HNL	Mains choke (optional)
HLC01	DC bus capacitor unit (optional only with low load of motor output at HCS02)
K1	Mains contactor
KCU	Electronic control system
KSM	Distributed servo drive
MSK	Servo motor
24V	24V supply
RHS	Terminal connector
RKG	Encoder cable
RKH	Hybrid cable
RKL	Motor cable
X3.2	Connection of hybrid cable at first KSM

Fig.9-7: Drive System Rexroth IndraDrive Mi With HCS02

Courtesy of CMA/Flodyne/Hydradyne ▪ Motion Control ▪ Hydraulic ▪ Pneumatic ▪ Electrical ▪ Mechanical ▪ (800) 426-5480 ▪ www.cmafh.com

Drive System Rexroth IndraDrive Mi With HCS03 Supply Unit:

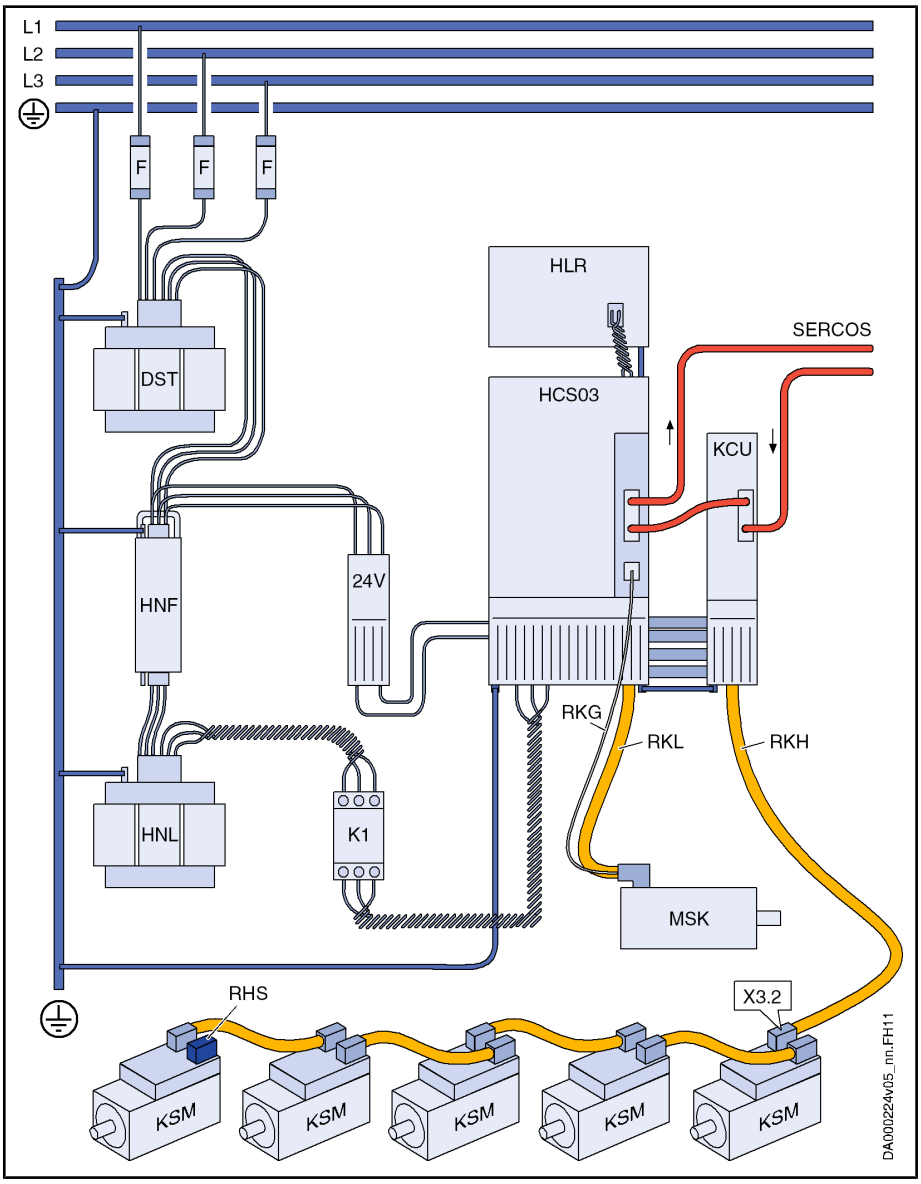

DST	Transformer (optional)
F	Fuses
HCS03	Converter
HLR	Braking resistor (optional)
HNF	Mains filter
HNL	Mains choke (optional)
K1	Mains contactor
KCU	Electronic control system
KSM	Distributed servo drive
MSK	Servo motor
RHS	Terminal connector
RKH	Hybrid cable
RKG	Encoder cable
RKL	Motor cable
24V	24V supply
X3.2	Connection of hybrid cable at first KSM

Fig.9-8: Drive System Rexroth IndraDrive Mi With HCS03

Courtesy of CMA/Flodyne/Hydradyne ▪ Motion Control ▪ Hydraulic ▪ Pneumatic ▪ Electrical ▪ Mechanical ▪ (800) 426-5480 ▪ www.cmafh.com

Drive System Rexroth IndraDrive Mi With HMV02 Supply Unit:

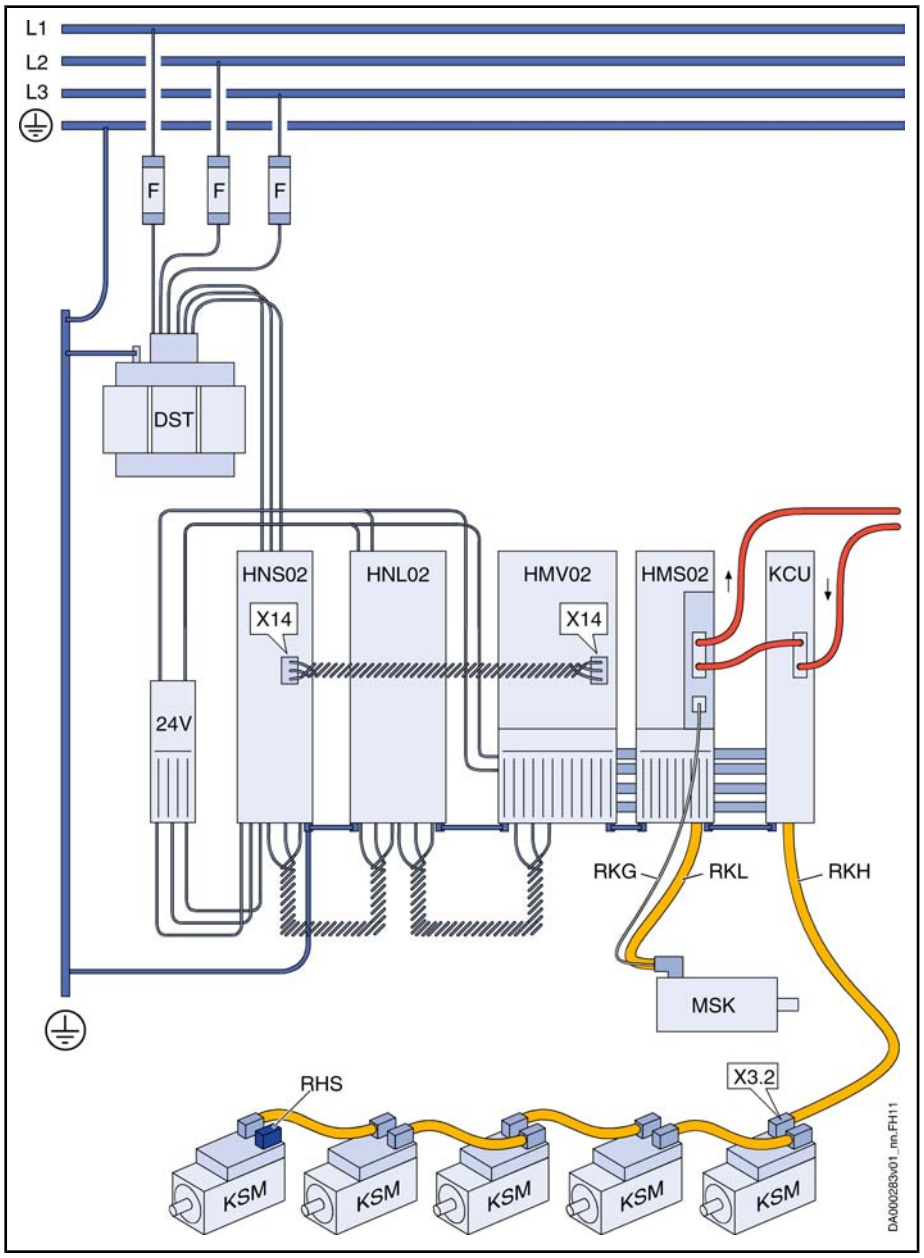

24V	24V supply
DST	Transformer (optional)
F	Fuses
HMS02	Inverter (optional)
HMV02	Supply unit
HNS02	Mains filter with switch-disconnector
HNL02	Mains choke
KCU	Electronic control system
KSM	Distributed servo drive
MSK	Servo motor (optional)
RHS	Terminal connector
RKG	Encoder cable (optional)
RKH	Hybrid cable
RKL	Motor cable (optional)
X14	Mains synchronization (only with regenerative HMVs)

Courtesy of CMA/Flodyne/Hydradyne ▪ Motion Control ▪ Hydraulic ▪ Pneumatic ▪ Electrical ▪ Mechanical ▪ (800) 426-5480 ▪ www.cmafh.com

X3.2 Connection of hybrid cable RKH at first KSM
Fig.9-9: Drive System Rexroth IndraDrive Mi With HMV02

Parallel Strings of Drives

☞ At the **first** KSM/KMS, always plug the hybrid cable RKH in connection point **X3.2**.

Always terminate the unassigned connection at the **last** KSM/KMS with a **terminal connector RHS**.

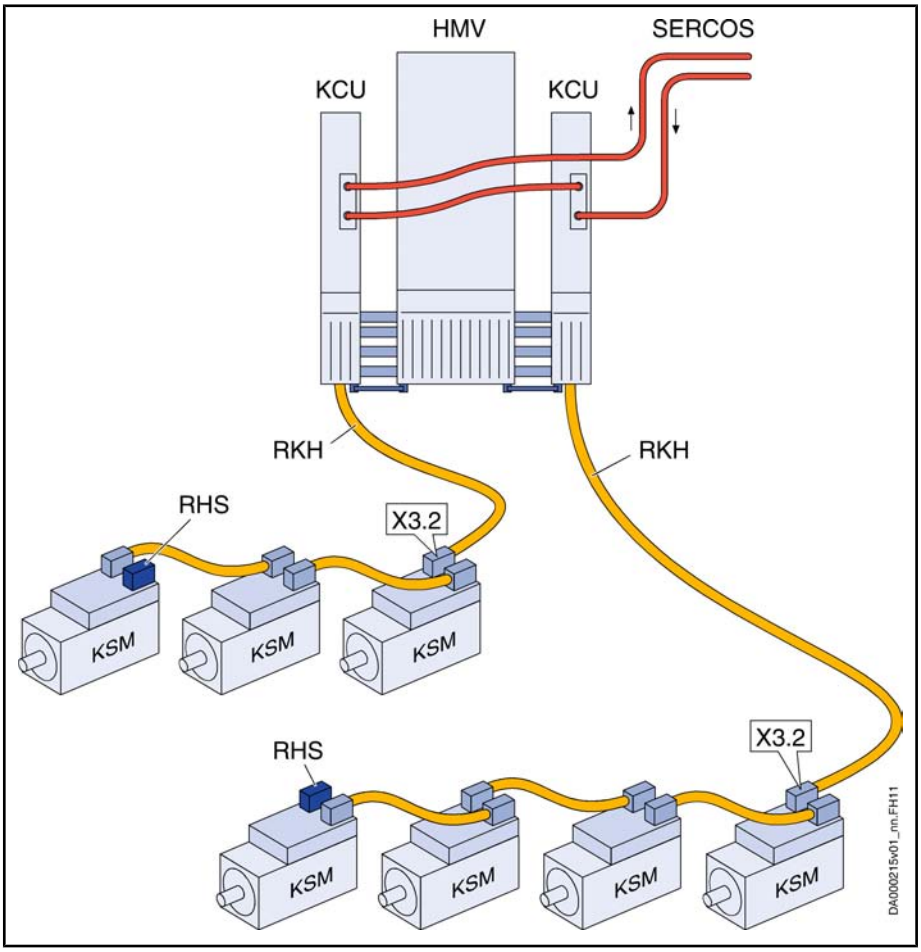

HMV Supply unit
KCU Electronic control system
KSM Distributed servo drive
RHS Terminal connector
RKH Hybrid cable
X3.2 Hybrid cable connection
Fig.9-10: Parallel Strings of Drives

9.3 KMS

9.3.1 Required Steps to Follow

Preparations

Make the following preparations for mounting:

1. Procure tools, auxiliary materials, measuring and test equipment.

2. Check all components for visible damage. Defective components mustn't be mounted.
3. Ensure that dimensions and tolerances on the installation side are suitable for attachment (for details, see dimensional drawing).
4. Check whether all components, mounting surfaces and threads are clean.
5. Ensure that mounting can be done in a dry and dust-free environment.

Mounting KMS

Mounting for Easy Servicing

To allow trouble-free servicing, make sure that the following aspects are fulfilled after you have mounted KSM:

- Connection points X2, X37 and X38 can be easily accessed
- MMC slot X7 can be easily accessed
- SERCOS address selector switches S4 and S5 can be easily accessed
- Diagnostic LED H14 is visible

Notes on Mounting

1. **Preferably mount KMS to a conductive surface**. If this is impossible, later on connect the second connection point of equipment grounding conductor at KMS to the equipment grounding system of the installation.
2. For the dimensions of the mounting holes, see the Dimensional Drawing KMS.
3. Data of the **mounting screws**:
   - Thread: M6
   - Head diameter: < 11 mm
   - Tightening torque: 6 Nm

9.3.2 Practical Tips

See description of KSM: Practical Tips, page 142

9.3.3 Electrical Connection

See description of KSM: Electrical Connection, page 142

9.4 KCU

Adjusting Mounting Depths

HMV01 and HCS03 devices have greater mounting depths than the electronic control system KCU. For connecting the electronic control system KCU to an HMV01 or HCS03 device, you must therefore use the control cabinet adapter **HAS03.1-002** which compensates the different mounting depths (see also chapter "Accessories").

Courtesy of CMA/Flodyne/Hydradyne ▪ Motion Control ▪ Hydraulic ▪ Pneumatic ▪ Electrical ▪ Mechanical ▪ (800) 426-5480 ▪ www.cmafh.com

Courtesy of CMA/Flodyne/Hydradyne ▪ Motion Control ▪ Hydraulic ▪ Pneumatic ▪ Electrical ▪ Mechanical ▪ (800) 426-5480 ▪ www.cmafh.com

10 Accessories

10.1 Overview

KCU	KSM, KMS
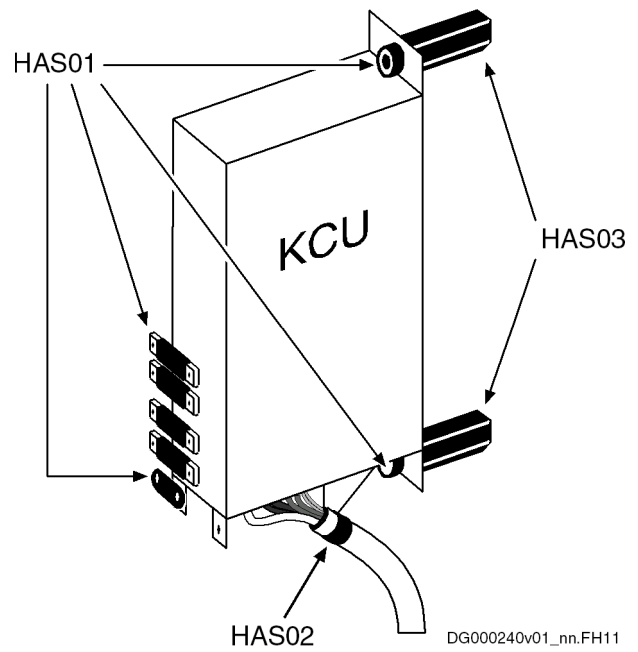	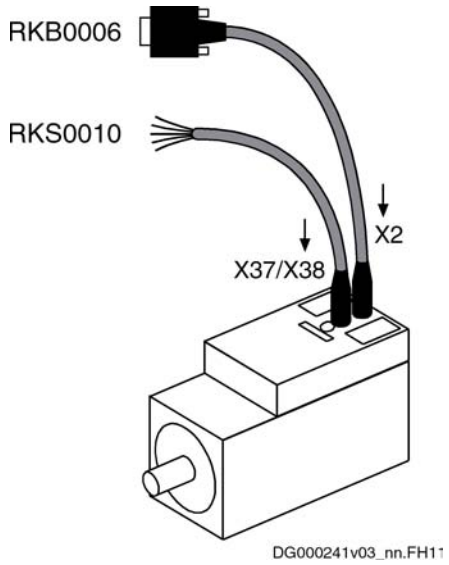
• **HAS01** Basic accessory • **HAS02** Strain relief and shield connection of hybrid cable • **HAS03** Control cabinet adapter	• **RKB0006** Interface cable (X2 ↔ PC) • **RKS0010** Interface cable (X37 or X38 ↔ Control unit)

Fig. 10-1: Accessories

10.2 HAS01, Basic Accessory

For the electronic control system KCU, you need the basic accessory **HAS01.1-050-072-MN**.

The basic accessory HAS01 contains:

- Parts for fixing the device
- Contact bars for connecting
  - the DC bus
  - the control voltage supply
- Joint bar for connecting equipment grounding conductors of KCU and neighboring device

📖 For a detailed description, see documentation "Rexroth IndraDrive, Additional Components and Accessories".

Courtesy of CMA/Flodyne/Hydradyne ▪ Motion Control ▪ Hydraulic ▪ Pneumatic ▪ Electrical ▪ Mechanical ▪ (800) 426-5480 ▪ www.cmafh.com

Courtesy of CMA/Flodyne/Hydradyne ▪ Motion Control ▪ Hydraulic ▪ Pneumatic ▪ Electrical ▪ Mechanical ▪ (800) 426-5480 ▪ www.cmafh.com

10.3 HAS02, Strain Relief and Shield Connection

☞ For proper and correct installation of KSM and KCU, use the hybrid cable RKH and the accessory **HAS02.1-015-NNN-NN**.

The accessory **HAS02.1-015-NNN-NN**

- provides the hybrid cable with strain relief
- connects the shield of the hybrid cable to the housing of the electronic control system KCU

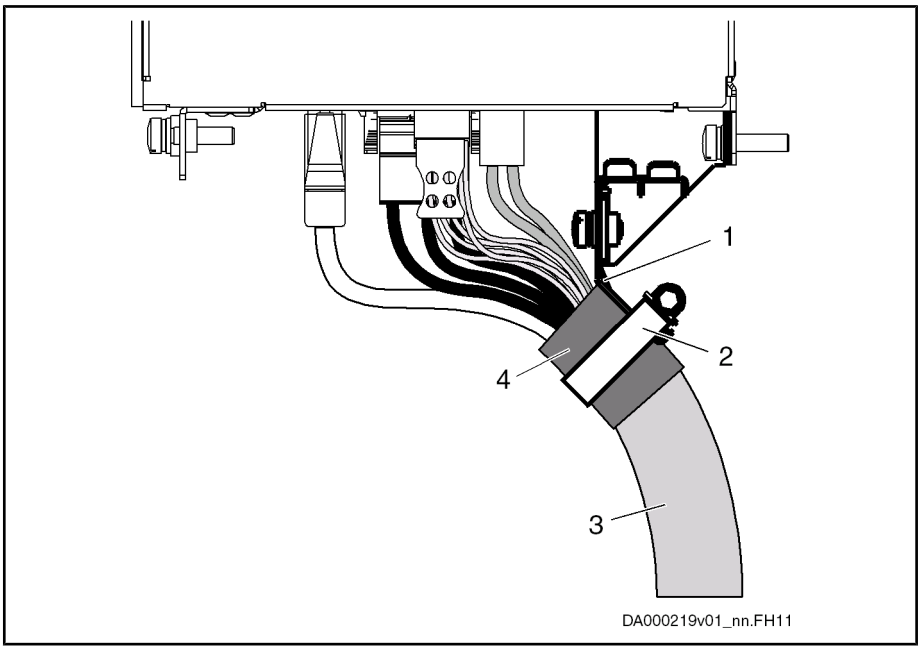

1	Shielding plate
2	Clip
3	Hybrid cable
4	Shield of hybrid cable

Fig. 10-2: Strain Relief and Shield Connection

- Mount the shielding plate (1) to the electronic control system KCU according to the desired outgoing direction of the hybrid cable (horizontal or 45°).
- According to the diameter of the hybrid cable (3), the shielding plate (1) provides two supports (12–18 mm or 19–30 mm). Fix the hybrid cable (3) to the corresponding support with a clip (2). Make sure that the shield (4) of the hybrid cable has good contact with the shielding plate (1).

10.4 HAS03, Control Cabinet Adapter

HMV01 and HCS03 devices have greater mounting depths than the electronic control system KCU. For connecting the electronic control system KCU to an HMV01 or HCS03 device, you must therefore use the control cabinet adapter **HAS03.1-002** which compensates the different mounting depths.

Courtesy of CMA/Flodyne/Hydradyne ▪ Motion Control ▪ Hydraulic ▪ Pneumatic ▪ Electrical ▪ Mechanical ▪ (800) 426-5480 ▪ www.cmafh.com

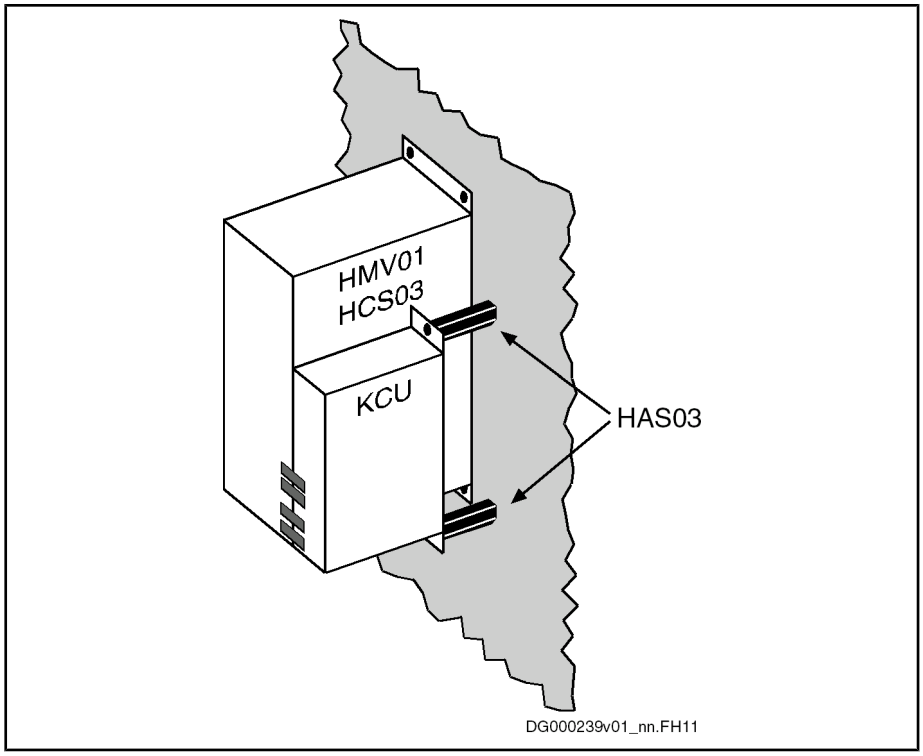

Fig. 10-3: HAS03

For a detailed description, see documentation "Rexroth IndraDrive, Additional Components and Accessories".

10.5 RKB0006, Interface Cable

10.5.1 Usage

Assignment

The extension **RKB0006** can be used at KSM01 and KMS.

Lengths That Can Be Ordered, Order Code

Lengths: 5 m

For your order, indicate the complete order code **RKB0006 / 05,0**.

RKB0006		
Plug-in connector bus	**Bulk cable**	**Plug-in connector PC**
M12, 8-pin	Bus cable	INS0457/L01

Interconnection diagram

Courtesy of CMA/Flodyne/Hydradyne ▪ Motion Control ▪ Hydraulic ▪ Pneumatic ▪ Electrical ▪ Mechanical ▪ (800) 426-5480 ▪ www.cmafh.com

Accessories

RKB0006

Plug-in connector bus	Bulk cable	Plug-in connector PC

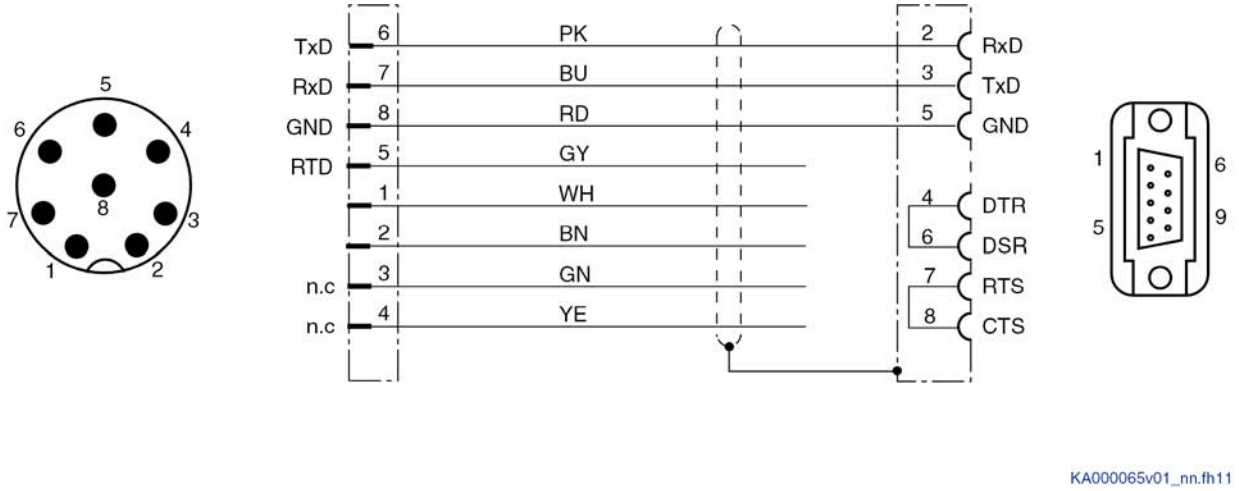

© Bosch Rexroth AG, 2007

Fig.10-4: Parts RKB0006

10.6 RKS0010, Interface Cable

Assignment The extension **RKS0010** can be used at KSM and KMS.

Lengths That Can Be Ordered, Order Code Lengths: 3 m

For your order, indicate the complete order code **RKS0010 / 03,0**.

RKS0010

Plug-in connector	Bulk cable	Plug-in connector
M12 plug-in connector	INK0750	Open ends

Interconnection diagram

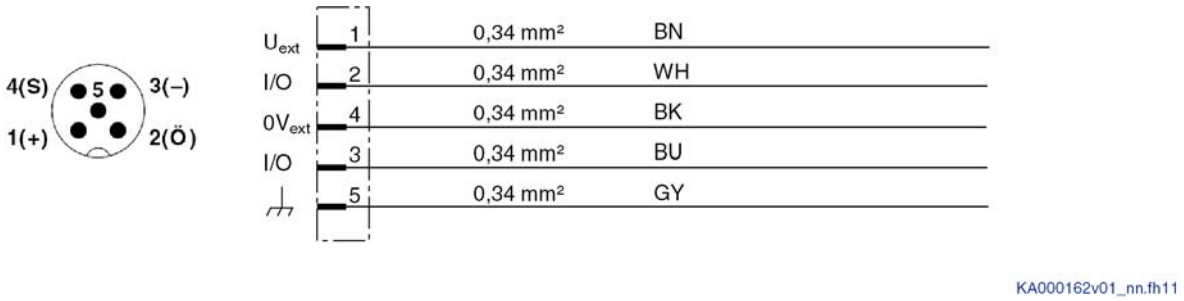

© Bosch Rexroth AG, 2010

Fig.10-5: Parts RKS0010

11 Commissioning, Operation, Diagnoses and Maintenance

11.1 Notes on Commissioning

11.1.1 General Information

⚠ WARNING **High electrical voltage! Danger to life, electric shock and severe bodily injury!**

Read and observe the detailed safety instructions contained in this documentation in chapter "Important Notes".

11.1.2 Preparation

1. Keep the documentation of all used products ready.
2. Check the products for damage.
3. Check all mechanical and electrical connections.
4. Activate safety devices and monitoring systems of the installation.

11.1.3 How to Proceed

When all requirements have been fulfilled, commission the drive system according to the instructions contained in the corresponding product documentation. See the Functional Description of the firmware for the corresponding information.

The commissioning of controllers and control unit can require additional steps. The check of functionality and performance of the installations is not part of motor commissioning; instead, it is carried out within the scope of the commissioning of the machine as a whole. Observe the information and regulations of the machine manufacturer.

11.2 Notes on Operation

Make sure that the ambient conditions described are complied with during operation.

Courtesy of CMA/Flodyne/Hydradyne ▪ Motion Control ▪ Hydraulic ▪ Pneumatic ▪ Electrical ▪ Mechanical ▪ (800) 426-5480 ▪ www.cmafh.com

Courtesy of CMA/Flodyne/Hydradyne ▪ Motion Control ▪ Hydraulic ▪ Pneumatic ▪ Electrical ▪ Mechanical ▪ (800) 426-5480 ▪ www.cmafh.com

11.3 Diagnostic Functions

11.3.1 Diagnostic Display KSM/KMS

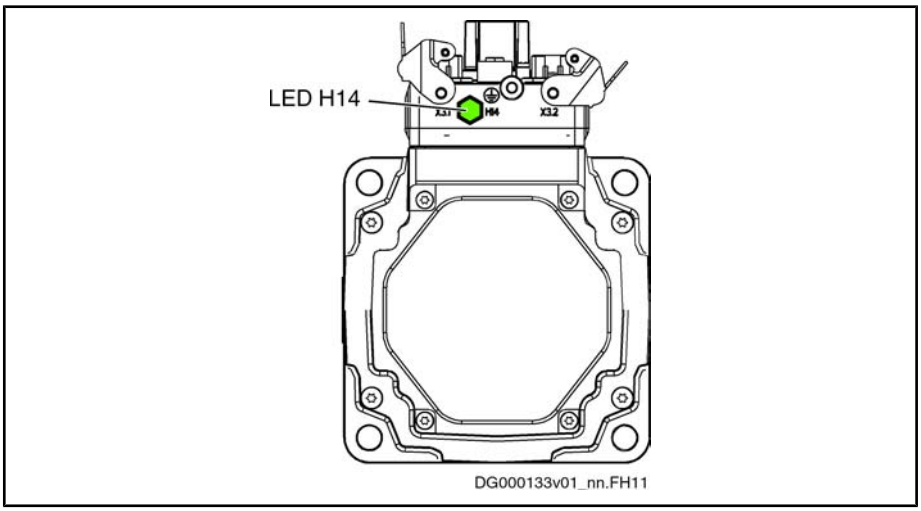

Fig. 11-1: LED H14 (Example KSM)

At the device, there is a tricolor LED which displays the drive status.

LED H14 Color / status		Significance	Measures
	Off	Supply unit not switched on	Check supply unit and, if necessary, switch it on
		Cable interrupted	Check cable and connector
		Hardware defective	Replace hardware
	Flashing green	Drive is error-free, but not yet ready for drive enable ("Bb")	If necessary, read exact status via "S-0-0095, Diagnostic message"
		Parameter mode	
	Green	Drive in control ("AF", "AH" or drive command)	Drive is error-free in operation and runs according to inputs **NOTE!** If you remove the connectors from the device in this status, this might damage the device!
		Power on and DC bus voltage available ("Ab")	
	Flashing yellow	Warning	Read exact status via "S-0-0095, Diagnostic message" and carry out service function
	Yellow	Firmware update running	During the firmware update, do not interrupt the 24V supply and do not unplug connectors
	Flashing red	Error	Read exact status via "S-0-0095, Diagnostic message" and carry out service function
	Red	Booting phase	Wait until booting phase is over (approx. 2 minutes)
		System error	Switch off and on; replace hardware, if necessary

Fig. 11-2: LED Displays at KSM/KMS

11.3.2 Electronic Control System KCU

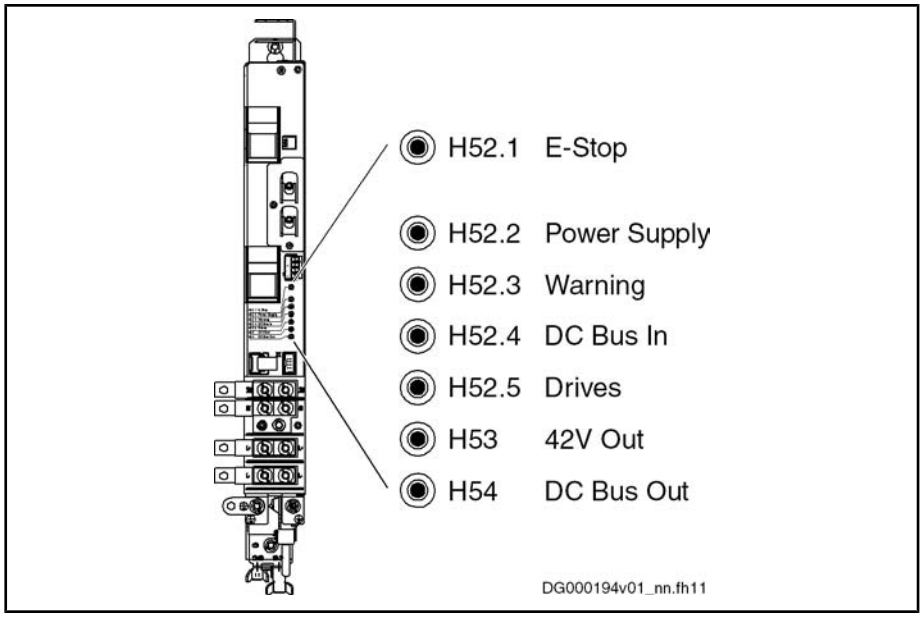

Fig. 11-3: LEDs at KCU

LED	Color / status		Significance	Measures
H52.1 E-Stop	○	Off	E-Stop not activated	Deactivate E-Stop, if necessary
	✳	Red	E-Stop active (/E_Stop)	Activate E-Stop, if necessary (see connection point X50)
H52.2 Power Supply	✳	Green	Supply unit without error, regular status	None
	✳	Red	Supply unit signals error (/Bb_V)	• Check power supply, see also "F2086 Error supply module" • Check whether terminal connector RHS is missing at X3.1 or X3.2 at last KSM of a string of drives
H52.3 Warning	✳	Green	Supply unit without warning (/Warn), regular status	None
	✳	Red	Supply unit signals warning	Check supply unit, see also "E2086 Prewarning supply module overload"
H52.4 DC Bus In	○	Off	DC bus voltage (L+; L-) too low	Switch power on at supply unit
	✳	Green	DC bus voltage (L+; L-) without error (Ud), regular status	None

Courtesy of CMA/Flodyne/Hydradyne ▪ Motion Control ▪ Hydraulic ▪ Pneumatic ▪ Electrical ▪ Mechanical ▪ (800) 426-5480 ▪ www.cmafh.com

Courtesy of CMA/Flodyne/Hydradyne ▪ Motion Control ▪ Hydraulic ▪ Pneumatic ▪ Electrical ▪ Mechanical ▪ (800) 426-5480 ▪ www.cmafh.com

LED	Color / status		Significance	Measures
H52.5 Drives		Green	No error at module bus, regular status	None
		Red	Module bus error (/Bb_A)	• Check module bus wiring • Check control voltage supply of the devices; see also "F2087 Module group communication error"
		Red/ green flashing	Drive system carries out error reaction (Bb_A)	Bring device at module bus to readiness for operation; see also diagnostic message "E2810 Drive system not ready for operation"
H53 42V Out		Green	Control voltage for KSM at output X53 okay	None
		Red	Control voltage for KSM at output X53 faulty	Overload at output: • Check voltage at X53 • Reduce load • Remove short circuit
H54 DC Bus Out		Off	DC bus (L+, L-) not ready for power output	Voltage at X54 is only monitored, if DC bus voltage at input (L+, L-) without error (see LED H52.4)
		Green	DC bus voltage (L+; L-) at output X54 okay (U > 50 V)	None
		Red	DC bus voltage (L+; L-) at output X54 not okay	Check fuses F4, F5 and replace them, if necessary

Fig. 11-4: LED Displays KCU

11.3.3 Diagnostic Messages via Parameters

The usual diagnostic parameters are used:

- S-0-0095
- S-0-0390
- P-0-0009
- …

See also Parameter Description of firmware

11.3.4 Firmware Functions

Easy Startup Mode

The easy startup mode is intended for initial commissioning. Easy startup can be carried out with the commissioning software "Rexroth IndraWorks D". For this purpose, connect KSM/KMS via the serial interface X2 to a PC (e.g. laptop for commissioning).

For easy startup, the digital inputs have been preset as follows:

- I_1 (X37.4): +24 V to activate positive direction of rotation
- I_2 (X37.2): +24 V to activate negative direction of rotation
- I_3 (X38.4): +24 V to activate drive enable

📖 See Functional Description of firmware → "Easy Startup Mode".

Analog Outputs

KSM/KMS have **no** analog outputs!

Oscilloscope Function

You can use the integrated oscilloscope function described in the Functional Description of the firmware!

📖 See Functional Description of firmware → "Oscilloscope Function".

Patch Function

KSM/KMS have a patch function which allows reading or writing controller-internal memory cells.

📖 See Functional Description of firmware → "Patch Function".

Monitoring Function

For extended diagnostic possibilities, KSM/KMS have a monitoring function.

📖 See Functional Description of firmware → "Monitoring Function".

11.4 Service Functions / Troubleshooting

11.4.1 General Information

⚠ WARNING **Lethal electric shock by live parts with more than 50 V!**

Wait at least **30 minutes** after switching off the supply voltages to allow discharging. To shorten the waiting time until voltage has fallen below 50 V, you can use a discharging device (see chapter "Appendix").

The following section explains the tasks required to eliminate errors or malfunction.

We distinguish the following actions:

- Replacement of fuses F4 and F5
- Deactivation
- Dismounting
- Replacement of KSM/KMS

11.4.2 Replacement of Fuses F4 and F5

⚠ WARNING **Lethal electric shock caused by live parts with more than 50 V!**

Before working on live parts: De-energize the installation and secure the power switch against unintentional or unauthorized re-energization.

Wait at least **30 minutes** after switching off the supply voltages to allow discharging. To shorten the waiting time until voltage has fallen below 50 V, you can use a discharging device (see chapter "Appendix").

Check whether voltages have fallen below 50 V before touching live parts!

Courtesy of CMA/Flodyne/Hydradyne ▪ Motion Control ▪ Hydraulic ▪ Pneumatic ▪ Electrical ▪ Mechanical ▪ (800) 426-5480 ▪ www.cmafh.com

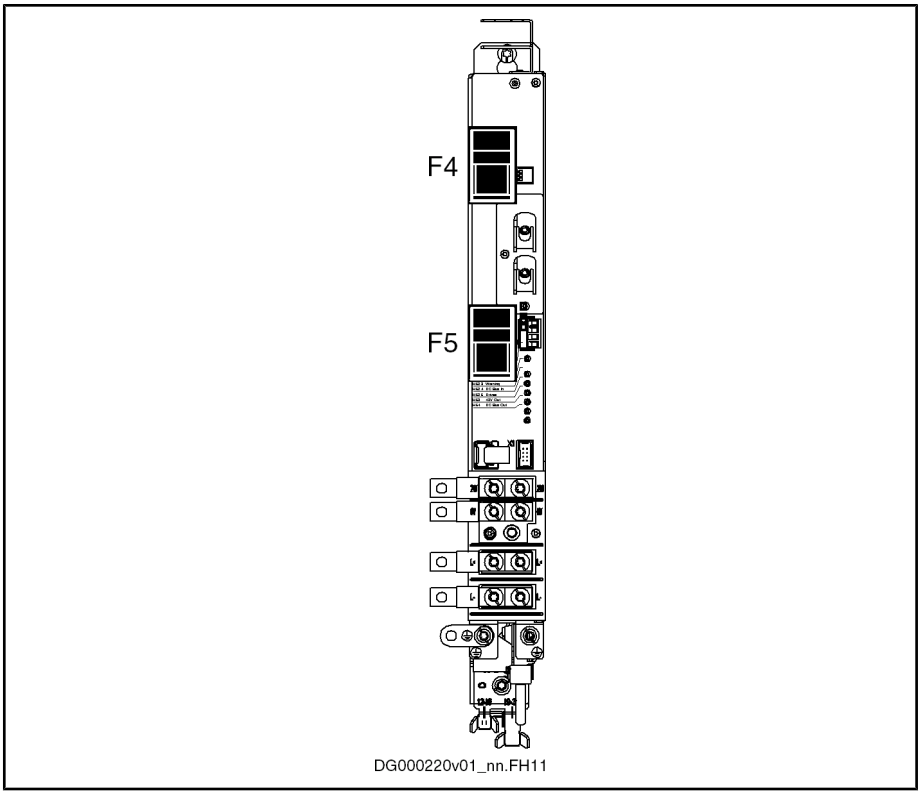

Fig.11-5: Fuses F4 and F5

Replacement of fuses F4 and F5

1. Switch off power voltage to drive system.
2. Wait at least 30 minutes to allow DC bus capacitors to discharge or use discharging device.
3. Open fuse carriers F4 and F5.
4. Remove fuses F4 and F5.

   Note: Always replace both fuses, even if only one of them is defective. The intact fuse probably was already damaged
5. Insert new **WP-30A14Fa** fuses by BUSSMANN.
6. Close fuse carriers F4 and F5.

11.4.3 Deactivating and Dismounting the Drive

Deactivation

In the case of malfunction, maintenance measures or to deactivate the motors, proceed as follows:

1. Observe the instructions contained in the machine documentation.
2. Use the machine-side control commands to bring the drive to a controlled standstill.
3. Switch off the power voltage and control voltage of the controller.
4. Switch off the main switch of the machine.
5. Secure the machine against accidental movements and against unauthorized operation.
6. Wait to allow the electric systems to discharge and then disconnect all electrical connections.

Courtesy of CMA/Flodyne/Hydradyne ▪ Motion Control ▪ Hydraulic ▪ Pneumatic ▪ Electrical ▪ Mechanical ▪ (800) 426-5480 ▪ www.cmafh.com

7. Before dismounting them, secure the motor and, if necessary, the blower unit against falling or movements, before unfastening the mechanical connections.

Dismounting

⚠ WARNING **Lethal injury caused by errors when controlling motors and working at moving parts!**

- Do not work at running or unsecured installations.
- Before starting to dismount, secure the machine against accidental movements and unauthorized operation.
- Before dismounting them, secure the motor and the supply lines unit against falling or movements, before unfastening the mechanical connections.

⚠ CAUTION **Burns caused by hot surfaces with temperatures of more than 100 °C!**

- Before beginning to work, let the motors cool down. The thermal time constant specified in the Technical Data is a measure for the time required for cooling down. Cooling down can require up to 140 minutes!
- Do not work at hot surfaces.
- Wear safety gloves.

1. Observe the instructions contained in the machine documentation.
2. Observe the Safety Instructions and carry out all steps according to the instructions for "deactivation".
3. Before dismounting them, secure the motor and the supply lines unit against falling or movements, before unfastening the mechanical connections.
4. Dismount the motor from the machine.
5. Store the motor appropriately.

11.4.4 Replacement of KSM or KMS

In case servicing becomes necessary, the motor with the electronic system is replaced by a new motor of the same type. This requires the following steps:

1. De-energize the machine (switch off 24V supply, too!)
2. **WARNING!** High electrical voltage! Danger to life by electric shock!

   Before you start replacing KSM or KMS, wait 30 minutes to allow discharging.
3. Ensure isolation from supply
4. Dismount the defective KSM/KMS
5. Remove the MMC from the defective KSM/KMS at X7
6. Set the SERCOS address at the new KSM/KMS
7. Plug the removed MMC into the new KSM/KMS, mount the cover and make sure the sealing ring is undamaged
8. Mount the new KSM/KMS and establish the electrical connections
9. Switch on 24V supply
10. Load the parameter set

Courtesy of CMA/Flodyne/Hydradyne ▪ Motion Control ▪ Hydraulic ▪ Pneumatic ▪ Electrical ▪ Mechanical ▪ (800) 426-5480 ▪ www.cmafh.com

11. Reestablish the position data reference (homing procedure)

11.4.5 Service Function "Release Holding Brake"

Via the interface X2, you can "release" the integrated holding brake.

To carry out this function, the 24V supply must have been applied.

⚠ WARNING **Lethal injury caused by errors when controlling motors and working at moving parts!**

- Do not work at running or unsecured installations.
- Before starting to dismount, secure the machine against accidental movements and unauthorized operation.
- Before dismounting them, secure the motor and the supply lines unit against falling or movements, before unfastening the mechanical connections.

For the purpose of commissioning and servicing, release the holding brake via connection point X2 by connecting the contacts X2.1 and X2.2.

11.4.6 Saving Parameters

For servicing, the drive parameters must be saved and archived at initial commissioning (e.g. with the software Rexroth IndraWorks D); this is necessary, because you won't probably be able to read the parameters of the defective drive.

Parameters can be administrated in the control unit or saved and loaded via the RS232 interface (X2) and the software "Rexroth IndraWorks D".

11.4.7 Firmware Update

See Functional Description of firmware → "Firmware Replacement".

☞ If the firmware of the MMC differs from the internal firmware, the device is operated with the MMC firmware.

Firmware ≥ MPB05: If the firmware update has failed, the drive tries to load the firmware from the MMC after previous switching off and on.

11.4.8 MMC

After you have unscrewed the cover, you can remove the MMC (MultiMedia-Card) from the MMC slot X7. The MMC contains firmware and parameters which allow easily programming the drive during commissioning.

☞ Make a backup copy of the content of the MMC (saving parameters) before changing firmware or parameters.

NOTICE **Risk of damage by MMC incorrectly plugged in!**

When you plug in the MMC, the contacts must point at the heat sink! Otherwise, the MMC or the device might be damaged when you screw the MMC cover.

Courtesy of CMA/Flodyne/Hydradyne ▪ Motion Control ▪ Hydraulic ▪ Pneumatic ▪ Electrical ▪ Mechanical ▪ (800) 426-5480 ▪ www.cmafh.com

Courtesy of CMA/Flodyne/Hydradyne ▪ Motion Control ▪ Hydraulic ▪ Pneumatic ▪ Electrical ▪ Mechanical ▪ (800) 426-5480 ▪ www.cmafh.com

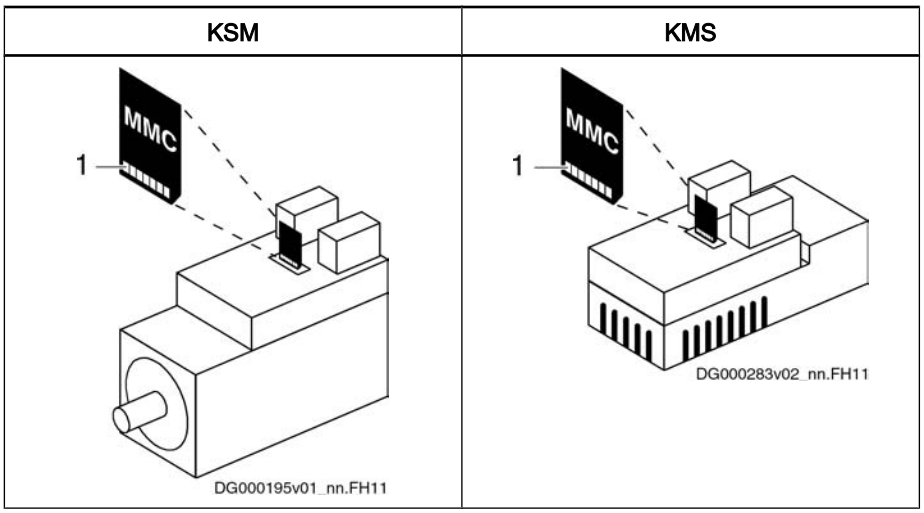

1 Contacts of MMC

Fig.11-6: Plugging in the MMC

Use the software "Rexroth IndraWorks D" to configure the data transfer from the MMC after control voltage has been switched on.

11.5 Maintenance

11.5.1 Maintenance of the Motor Component

General Information

The **motors** operate in a maintenance-free way within the given operating conditions and service life. However, operation under unfavorable conditions can lead to limitations in availability.

- Increase the availability with regular preventive maintenance measures. Observe the information in the maintenance schedule of the machine manufacturer and the maintenance measures described below.

⚠ CAUTION **Risk of burns by hot surfaces with temperatures of more than 100 °C!**

Before beginning to work, let the motors cool down. The thermal time constant specified in the Technical Data is a measure for the time required for cooling down. Cooling down can require up to 140 minutes!

Do not work at hot surfaces.

Wear safety gloves.

Cleaning

Excessive dirt, dust or shavings may affect the function of the motors adversely, may in extreme cases even cause a failure of the motors. For that reason, you should clean the cooling ribs of the motors in regular intervals (at the latest, after one year is over).

Bearings

The nominal service life of the bearings is L10h > 30000 h (according to DIN ISO 281, ed. 1990), if the permissible radial and axial forces are not exceeded.

The motor bearings should be replaced, if

Courtesy of CMA/Flodyne/Hydradyne ▪ Motion Control ▪ Hydraulic ▪ Pneumatic ▪ Electrical ▪ Mechanical ▪ (800) 426-5480 ▪ www.cmafh.com

- the nominal bearing service life has been reached
- running noise can be heard

☞ We recommend that you have the bearings replaced by Rexroth.

Connection Cables

Check connection cables for damage in regular intervals and replace them, if necessary.

Check any optionally present flexible cable tracks for damage and replace them, if necessary.

⚠ WARNING **Danger to life by live parts with more than 50 V!**

Do not repair any connection cables provisionally. If the slightest damage is detected in the cable sheath, you must immediately put the installation out of operation and replace the connection cable.

Check the equipment grounding conductor for proper connection and tight fit in regular intervals.

Holding Brake–Commissioning and Maintenance Instructions

In order to ensure proper functioning of the holding brake, it must be checked before the motors are commissioned. The test as well as the resurfacing may be carried out "mechanically by hand" **or** "automatically by means of the software function".

Checking and Resurfacing of Holding Brakes by Hand

Measure the holding torque (M4) of the holding brake. If necessary, resurface the holding brake.

Measuring the Holding Torque (M4) of the Holding Brake

1. De-energize the motor and secure it against re-energization.
2. Measure the transferable holding torque of the holding brake with a torque wrench. For holding torque (M4) refer to the technical data.

   If the holding torque (M4) is achieved, the motor is ready for assembly.
   If the holding torque (M4) **is not achieved**, the subsequent resurfacing-process can be used to reconstitute the holding torque.

Resurfacing the Holding Brake

1. At closed holding brake, turn the output shaft by hand, e.g. with the help of a torque wrench, by about 5 revolutions.
2. Measure the holding torque (M4).

   If the holding torque (M4) is achieved, the motor is ready for assembly.
   If the specified holding torque (M4) is not attained after several grinding-in processes, the holding brake is not operable. Please, contact the Rexroth Service.

Checking and Resurfacing of Holding Brakes by means of the Software Function

Checking the Holding Torque (M4) via P-0-0541, C2100 Command Holding system check

1. The efficiency of the holding brake and the opened state are checked by the control device by starting the routine "P-0-0541, C2100 Command Holding system check".

If the holding brake is operational, the drive is in an operational state after the routine was run through. If the braking torque is too low, the control device outputs a corresponding message.

☞ The brake test can also be carried out cyclically in the framework of a preventive maintenance.

Restoring the Holding Torque (M4) by means of the Software Function

The following possibilities are available:

1. Realization of the resurfacing routine IndraDrive "Restoring the holding torque "(see"P-0-0544, C3900 Command Resurfacing of motor holding brake"). A repeated realization of the resurfacing routine is possible.

   Upon the execution of the command C3900 it is not checked whether the resurfacing of the holding brake was successful. It is recommended to execute the command C2100 (Command Holding system check) once again.

2. Resurfacing routine by superior control. Here, special control programs adapted to the machine and system concepts are required. If necessary, please contact your Bosch Rexroth distribution partner and discuss the resurfacing routine parameters for your application.

i For more detailed information about software functions refer to the functional description "Rexroth IndraDrive Firmware for Drive Control Devices MPx-xx, DOK-INDRV*-MP*-xxVRS**-FKxx-EN-P."

11.5.2 Maintenance of the Electronic System of the Drive

The electronic system of the drive (power section and control section) operates without wear within the given operating conditions and service life. However, operation under unfavorable conditions (e.g. increased ambient temperature) can lead to limitations in availability.

⚠ CAUTION **Risk of burns by hot surfaces with temperatures of more than 60 °C!**

After switching the devices off, wait 15 minutes to allow them to cool down before touching them. Do not work at hot surfaces.

In regular intervals (at the latest, after one year is over), check the heat sink of the electronic system of the drive for accumulated dirt (e.g. dust deposits). Remove accumulated dirt.

Courtesy of CMA/Flodyne/Hydradyne ▪ Motion Control ▪ Hydraulic ▪ Pneumatic ▪ Electrical ▪ Mechanical ▪ (800) 426-5480 ▪ www.cmafh.com

Courtesy of CMA/Flodyne/Hydradyne ▪ Motion Control ▪ Hydraulic ▪ Pneumatic ▪ Electrical ▪ Mechanical ▪ (800) 426-5480 ▪ www.cmafh.com

12 Environmental Protection and Disposal

12.1 Environmental Protection

Production Processes

The products are made with energy- and resource-optimized production processes which allow re-using and recycling the resulting waste. We regularly try to replace pollutant-loaded raw materials and supplies by more environment-friendly alternatives.

No Release of Hazardous Substances

Our products do not contain any hazardous substances which may be released in the case of appropriate use. Normally, our products will not have any negativ influences on the environment.

Significant Components

Basically, out products contain the following components:

Electronic devices
- steel
- aluminum
- copper
- synthetic materials
- electronic components and modules

Motors
- steel
- aluminum
- copper
- brass
- magnetic materials
- electronic components and modules

12.2 Disposal

Return of Products

Our products can be returned to our premises free of charge for disposal. It is a precondition, however, that the products are free of oil, grease or other dirt.

Furthermore, the products returned for disposal must not contain any undue foreign material or foreign components.

Send the products ”free domicile” to the following address:

Bosch Rexroth AG
Electric Drives and Controls
Buergermeister-Dr.-Nebel-Strasse 2
97816 Lohr am Main, Germany

Packaging

The packaging materials consist of cardboard, wood and polystyrene. These materials can be recycled anywhere without any problem.

For ecological reasons, please refrain from returning the empty packages to us.

Recycling

Most of the products can be recycled due to their high content of metal. In order to recycle the metal in the best possible way, the products must be disassembled into individual modules.

Metals contained in electric and electronic modules can also be recycled by means of special separation processes.

Products made of plastics can contain flame retardants. These plastic parts are labeled according to EN ISO 1043. They have to be recycled separately or disposed of according to the valid legal requirements.

If the products contain batteries or accumulators, remove them before recycling and dispose of them separately.

Courtesy of CMA/Flodyne/Hydradyne ▪ Motion Control ▪ Hydraulic ▪ Pneumatic ▪ Electrical ▪ Mechanical ▪ (800) 426-5480 ▪ www.cmafh.com

Courtesy of CMA/Flodyne/Hydradyne ▪ Motion Control ▪ Hydraulic ▪ Pneumatic ▪ Electrical ▪ Mechanical ▪ (800) 426-5480 ▪ www.cmafh.com

13 Service and Support

Our service helpdesk at our headquarters in Lohr, Germany and our worldwide service will assist you with all kinds of enquiries. You can reach us **around the clock - even on weekend and on holidays**.

	Helpdesk	Service Hotline Worldwide
Phone	+49 (0) 9352 40 50 60	Outwith Germany please contact our sales/service office in your area first. For hotline numbers refer to the sales office addresses on the Internet.
Fax	+49 (0) 9352 40 49 41	
E-mail	service.svc@boschrexroth.de	
Internet	http://www.boschrexroth.com You will also find additional notes regarding service, maintenance (e.g. delivery addresses) and training.	

Preparing Information

For quick and efficient help please have the following information ready:

- Detailed description of the fault and the circumstances
- Information on the type plate of the affected products, especially type codes and serial numbers
- Your phone, fax numbers and e-mail address so we can contact you in case of questions.

Courtesy of CMA/Flodyne/Hydradyne ▪ Motion Control ▪ Hydraulic ▪ Pneumatic ▪ Electrical ▪ Mechanical ▪ (800) 426-5480 ▪ www.cmafh.com

Courtesy of CMA/Flodyne/Hydradyne ▪ Motion Control ▪ Hydraulic ▪ Pneumatic ▪ Electrical ▪ Mechanical ▪ (800) 426-5480 ▪ www.cmafh.com

Courtesy of CMA/Flodyne/Hydradyne ▪ Motion Control ▪ Hydraulic ▪ Pneumatic ▪ Electrical ▪ Mechanical ▪ (800) 426-5480 ▪ www.cmafh.com

14 Appendix

14.1 Discharging of Capacitors

14.1.1 Discharging DC Bus Capacitors

In the drive system Rexroth IndraDrive, capacitors are used in the DC bus as energy stores. In drive controllers and particularly in supply units, such capacitors have already been integrated.

Energy stores maintain their energy even when the supply voltage has been cut off and have to be discharged before somebody gets in contact with them.

Discharging devices have been integrated in the components of the drive system Rexroth IndraDrive; within the indicated discharging time, these devices discharge the voltage below the allowed 50 V.

If additional capacitors (such as DC bus capacitor units) are connected, these capacitors, too, have to be discharged before somebody gets in contact with them.

Due to the operating principle, the discharging time is the longer

- the bigger the energy store (the capacitance value)
- the higher the voltage to which the energy store has been charged
- the greater the resistance for discharging the capacitors

Components of the drive system Rexroth IndraDrive have been dimensioned in such a way that after the supply voltage was cut off, the voltage value falls below 50 V within a discharging time of a maximum of 30 minutes.

To shorten the waiting time until voltage has fallen below 50 V, you can take the following measures:

- When using HMV01 supply units (exception: HMV01.1R-W0120):

  Activate the function "ZKS" (ZKS = DC bus short circuit)
- Use the discharging device described below

14.1.2 Discharging Device

Operating Principle

A contactor is installed to switch a resistor to the terminals L+ and L- of the DC bus connection to discharge the capacitors. The contactor is activated via a control input which is supplied with appropriate control voltage.

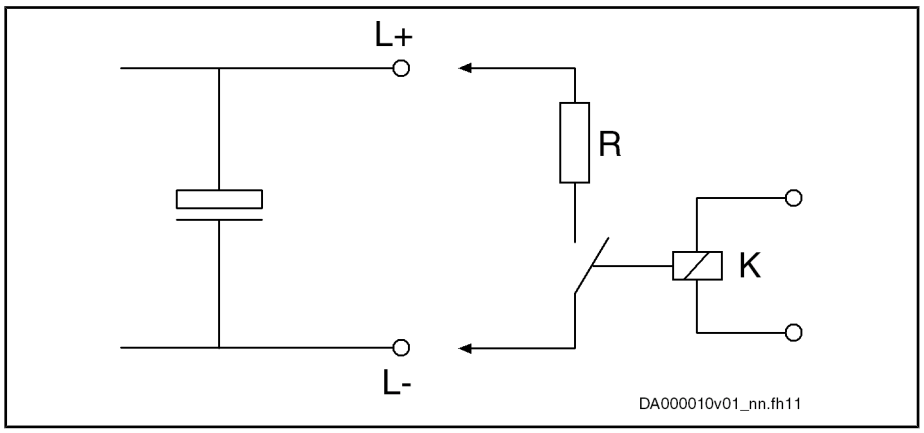

R Discharging resistor
K Contactor contact
Fig. 14-1: Operating Principle of Discharging Device

Courtesy of CMA/Flodyne/Hydradyne ▪ Motion Control ▪ Hydraulic ▪ Pneumatic ▪ Electrical ▪ Mechanical ▪ (800) 426-5480 ▪ www.cmafh.com

Dimensioning

The individual components have to be sufficiently dimensioned:

- Value of the discharging resistor: 1000 ohm and at least 1000 W
- The discharging resistor and the contactor contact have to withstand the loads of practical operation (for example in the case of frequent use of the discharging device of the occurring continuous power).
- The contactor contact has to withstand the occurring direct voltage of a minimum of 1000 V.
- The contactor contact has to withstand the occurring discharge current according to the resistance value that is used, i.e. 1 A with 1000 ohm.

Installation

⚠ WARNING **Lethal electric shock caused by live parts with more than 50 V!**

Before working on live parts: De-energize the installation and secure the power switch against unintentional or unauthorized re-energization.

Wait at least **30 minutes** after switching off the supply voltages to allow discharging.

Check whether voltages have fallen below 50 V before touching live parts!

NOTICE **Risk of damage by intense heat!**

During the discharging process, the discharging resistor generates intense heat. Therefore, place the discharging resistor as far as possible from heat-sensitive components.

How to install the discharging device

1. Preferably install discharging device **before switching on supply voltage for the first time**.

   If you install discharging device after having switched on supply voltage for the first time, wait 30 minutes to allow discharging. Check whether voltage has fallen below 50 V before touching live parts!
2. Place discharging resistor as far as possible from heat-sensitive components.

Activation

Observe the following order for activating the discharging device:

1. De-energize installation and secure power switch against unintentional or unauthorized re-energization.
2. Activate discharging device.

Index

Symbols

+24V, 0V
- Control voltage supply connection 93

24V supply
- Specification 47

A

Acceptance tests..... 37
Accessories
- Cable, RKB0006 153
- Cable, RKS0010 154
- Contact bars (for DC bus, control voltage) . 151
- For connection of hybrid cable 152
- HAS01.1-050-072-MN 151
- HAS02.1-015-NNN-NN 152
- HAS03 152
- Mounting 151
- Overview 151
- Shield connection 152
- Strain relief 152

Adapter
- For adjusting mounting depths 152

Address selector switches
- SERCOS 117

Ambient conditions
- General 40

Analog outputs..... 159
Appropriate use..... 25
- Applications 25

Approvals..... 37
Average speed..... 123
Axial load..... 123

B

Bearing load..... 64
Bearings
- Load 122
- Maintenance 163
- Redundant 127
- Service life 124

Brake control..... 125

C

Cables
- Allowed lengths (hybrid cables) 108
- Documentation 23
- Encoder cables 105
- Hybrid cables, maximum cable length vs. number of axes 111
- Maintenance 164
- Motor cables 106
- RKB0006 153
- RKH, technical data 73
- RKS0010 154

C

...Cables
- Selection, hybrid cables RKH 74
- Shield connection 152
- Strain relief 152

Capacitors
- Discharging 171

CCC, China Compulsory Certification..... 39
CE label..... 37
Certifications..... 37
Characteristics
- KSM 57

China Compulsory Certification (CCC)..... 39
Cleaning..... 163
Commissioning..... 155
Compatibility
- With foreign matters 45

Components
- Documentations 21
- Mounting positions 44
- Rexroth IndraDrive Mi 11

Connection
- Connection diagram KCU 140
- Connection diagram of drive system 143
- Connection points of KCU 85
- Connection points of KMS 103
- Connection points of KSM 94
- Control voltage supply 93
- DC bus 91
- Digital inputs/outputs 99
- Electrical 142
- Encoder 105
- Ground 84
- Hybrid cables 97
- Motor (at KMS) 106
- Second connection point of equipment grounding conductor 102

Connection diagram
- Drive system 143
- KCU 140

Connection point
- Equipment grounding conductor 83

Connection points
- KCU 85
- KMS 103
- KSM 94

Contained substances
- see "Significant components" 167

Continuous power
- String of drives 113

Control voltage
- Control voltage supply connection 93
- KCU 109
- Output, X53 90
- Specification 47

Courtesy of CMA/Flodyne/Hydradyne ▪ Motion Control ▪ Hydraulic ▪ Pneumatic ▪ Electrical ▪ Mechanical ▪ (800) 426-5480 ▪ www.cmafh.com

Courtesy of CMA/Flodyne/Hydradyne ▪ Motion Control ▪ Hydraulic ▪ Pneumatic ▪ Electrical ▪ Mechanical ▪ (800) 426-5480 ▪ www.cmafh.com

Index

C
Cooling mode
Identification in type code 17
Cooling ribs..... 163
Coupling attachment..... 128
C-UL-US listing..... 37
Current limitation
Motor 118
C-UR-US listing..... 38

D
DC bus
Connection 91
Output, X54 90
DC bus capacitors
Discharging 171
Deactivation
Of the drive 160
Declaration of conformity..... 37
Derating vs. installation altitude
Overvoltage limiter 41, 43
Devices
Mounting positions 44
Diagnosis
Functions 156
LEDs 156
Parameters 158
Diagnostic display
KCU (LED H52.1…H54) 157
KSM/KMS (LED H14) 156
Dimensional drawing
KCU 73
KMS 69
KSM 60
Dimensions
KCU 73
KMS 69
KSM 60
Discharging
DC bus capacitors 171
Discharging device..... 171
Dismounting
The drive 161
Disposal..... 167
Distortion indicator
SERCOS 109
Distributed drive controller
KMS 9, 66
Distributed servo drive
KSM 9, 53
Documentation
Cables 23
Changes 21
Drive systems 21
Editions 21
Firmware 23
Motors 22

D
...Documentation
Overview 21
Reference documentations 21
System components 21
Document structure..... 21
Drive system..... 27
Connection diagram 143
Driving elements
Mechanical attachment 127
Duty cycle..... 51

E
Easy startup mode..... 158
Electric drive system..... 27
Electronic control system KCU..... 9
Notes on project planning 109
Technical data 70
Encoder connection
X104 (KMS) 105
Encoder evaluation
KMS 116
Environmental protection..... 167
Equipment grounding conductor
Connection point 83
Second connection point of equipment grounding conductor 102
E-Stop
Input 88

F
F4, F5
Fuses 85
Replacement of fuses 159
File numbers
UL 37
Firmware
Documentation 23
Functions 158
KMS01 13
KSM01 13
Update 162
Flange mounting..... 141
Foreign matters
Compatibility 45
Fuses
F4, F5 85
Replacement 159

G
G1, G2, G3, G4, G5
Mounting positions 44
Gear attachment..... 128
Grease
Service life 124
Ground connection..... 84

Courtesy of CMA/Flodyne/Hydradyne ▪ Motion Control ▪ Hydraulic ▪ Pneumatic ▪ Electrical ▪ Mechanical ▪ (800) 426-5480 ▪ www.cmafh.com

Index

H

H14
LED (KSM/KMS) 156
H52.1…H54
LEDs (KCU) 157
Handling
Of the devices 137
HAS01.1-050-072-MN..... 151
HAS02.1-015-NNN-NN..... 152
HAS03
Control cabinet adapter 152
Hazardous substances..... 167
HCS
As supply unit 107
HCS01
Acceptance tests 37
Approvals 37
Certifications 37
HCS02
Supply unit for KCU and KSM/KMS 107
Heat dissipation..... 120, 163
Holding brake
Commissioning 164
Control 125
Danger warning 126
Identification in type code 17
Safety requirements 125
Sizing 127
Housing..... 46
Housing overtemperature..... 51
Hybrid cables..... 12
Allowed lengths 108
Between KCU and first KSM/KMS 77
Between two KSM/KMS 77
Connection 97
Flexible cable tracks 80
Identification 76
Interconnection diagrams 77
Maximum cable length vs. number of axes 111
Outgoing direction 74
RKH 73
Selection 74
Technical data 73

I

Identification
KCU 135
KSM 131, 133
RKH 76
Inappropriate use..... 26
Consequences, exclusion of liability 25
Inputs
Digital, isolated 99
Installation..... 137, 142
Installation conditions..... 40
Insulation monitoring..... 48

I

Insulation resistance test..... 46
Interconnection diagrams
Hybrid cables 77
Interface
Serial 96
Interfaces
Electrical 143
Isolated inputs/outputs..... 99

K

KCU..... 9
Brief description 69
Connection diagram 140
Connection points 85
Dimensional drawing 73
Dimensions 73
LEDs 157
Mounting 149
Scope of supply 131
Supplied by HCS02 107
Technical data 70
Type code 20
Type plate 135
Usage 69
Key..... 120
KMS
Brief description 66
Connection points 103
Data sheet 67
Dimensional drawing 69
Dimensions 69
Distributed drive controller 66
Encoder cables 105
Encoder evaluation 116
Features 10
LED H14 156
Maintenance 163
Motor cables 106
Mounting 148
Number of KMS in string 111
Replacement 161
Scope of supply 131
Second connection point of equipment grounding conductor 102
Serial interface 104
Technical data 67
Type code 19
Type plate 133
Usage 66
KSM
Bearing load 64
Characteristics 57
Connection points 94
Data sheet 53
Dimensional drawing 60
Dimensions 60

Courtesy of CMA/Flodyne/Hydradyne ▪ Motion Control ▪ Hydraulic ▪ Pneumatic ▪ Electrical ▪ Mechanical ▪ (800) 426-5480 ▪ www.cmafh.com

Index

K

...KSM
Features ... 9
LED H14 ... 156
Maintenance ... 163
Motor blower ... 116
Mounting ... 141
Number of KSM in string ... 111
Replacement ... 161
Scope of supply ... 131
Second connection point of equipment grounding conductor ... 102
Serial interface ... 95
Shaft Load ... 64
Technical data ... 53
Technical design ... 64
Type code ... 16
Type plate ... 131

L

L+, L- ... 91
LED
H14 (KSM/KMS) ... 156
H52.1…H54 (KCU) ... 157
Length
Identification in type code ... 17
Limitation
Motor current ... 118
Listing
C-UL-US ... 37
C-UR-US ... 38
Load
Bearings and shaft ... 122

M

Maintenance
KMS ... 163
KSM ... 163
Master communication
Identification in type code ... 18
MMC ... 98
Replacement ... 162
Module bus ... 86
Monitoring function ... 159
Motor
Connection at KMS (X156) ... 106
Current limitation ... 118
Documentation ... 22
Holding brake ... 125
Mounting positions ... 44
Output shaft ... 120
Standard motors ... 116
Temperature ... 119
Type of construction B05 ... 45
Motor blower
KSM ... 116

M

Motor encoder
Connection at KMS (X104) ... 105
Identification in type code ... 17
Mounting ... 137
KSM ... 141
Mounting depths ... 92, 149
Adapter ... 152
Mounting position
Definition (G1, G2, G3, G4, G5) ... 44
Motors ... 44
Mounting space ... 120
MultiMediaCard ... 98

N

Notes on operation ... 155
Number of KSM/KMS
In string of drives ... 111

O

Operating conditions
General ... 40
Operation modes ... 51
Oscilloscope function ... 159
Outgoing direction
Hybrid cables ... 74
Outputs
Digital, isolated ... 99
Output shaft
Plain output shaft ... 120
With key ... 120
With shaft sealing ring ... 121
Overview of functions ... 15
Overvoltage limiter
Derating vs. installation altitude ... 41, 43

P

Packaging ... 167
Parallel strings of drives ... 148
Parameters
Saving ... 162
Patch function ... 159
Peak power
String of drives ... 114
When accelerating ... 115
When decelerating ... 115
PELV ... 31
Performance profile
UEL_P_e ... 117
PFM02 ... 98, 131
Pinions ... 128
Power supply ... 107
String of drives ... 113
Prime coat ... 46
Probe inputs ... 99
Processing cycle ... 124

Courtesy of CMA/Flodyne/Hydradyne ▪ Motion Control ▪ Hydraulic ▪ Pneumatic ▪ Electrical ▪ Mechanical ▪ (800) 426-5480 ▪ www.cmafh.com

Index

P
Production processes..... 167
Product presentation..... 9
Project planning
Combining the individual components 107
Notes 107
Notes on electrical project planning 117
Notes on mechanical project planning 120
Project planning manuals..... 21
Protective extra-low voltage..... 31

Q
Qualified technical staff..... 137

R
Radial load..... 123
Radial shaft sealing ring..... 121
Recycling..... 167
Redundant bearings..... 127
Reference documentations..... 21
Release brake..... 95
Replacement
KMS 161
KSM 161
Return of products..... 167
Rexroth IndraDrive Mi
Components 11
Features 9
Rexroth IndraDyn..... 11
RHS0004
Terminal connector 80
RKB0006..... 153
RKH..... 12
Hybrid cables 73
Hybrid cables, selection 74
RKS0010..... 154
RS232..... 96
Running noise..... 164

S
S4, S5
SERCOS address selector switches 117
S6
SERCOS transmission power switch 88
Safety instructions for electric drives and controls..... 27
Safety option
Identification in type code 18
Scope of supply
KCU 131
KMS 131
KSM 131
Sealing ring
Output shaft 121
SERCOS
Address selector switches 117

S
...SERCOS
Distortion indicator 109
Interface 87
Transmission power, switch S6 88
X51 89
Serial interface..... 96
Service input
X2 (KMS) 104
X2 (KSM) 95
Shaft
Identification in type code 17
Load 64, 122
Plain 120
Sealing ring 121
With key 120
Shield connection..... 152
Significant components..... 167
Size
Identification in type code 17
Specifications
Of the components 37
Standard motors
Operation 116
Voltage load 68, 116
State-of-the-art..... 25
Status messages
X52 89
Storage
Of the components 39
Strain relief..... 152
String of drives
Available power 113
Continuous power 113
Number of KSM/KMS in string 111
Parallel strings of drives 148
Peak power 114
Supply unit
HCS 107
Support
see Service Hotline 169
Switching frequency..... 119
System presentation..... 9
System structure..... 13

T
Technical data
Cables 73
Hybrid cables RKH 73
KCU 70
KMS 67
KSM 53
Motor 51
Terms and definitions 49
Temperature
Motor 119

Courtesy of CMA/Flodyne/Hydradyne ▪ Motion Control ▪ Hydraulic ▪ Pneumatic ▪ Electrical ▪ Mechanical ▪ (800) 426-5480 ▪ www.cmafh.com

Index

T
Terminal connector
RHS0004 80
Test
Factory-side 46
Insulation resistance 46
Voltage test 46
Transport
Of the components 39
Troubleshooting..... 159
Type code
KCU 20
KMS 19
KSM 16
Type of construction
Motors 45
Type plate
KCU 135
KMS 133
KSM 131

U
UL
File numbers 37
Listing 37, 38
Use
Appropriate use 25
Inappropriate use 26

V
Voltage test..... 46

W
Winding
Identification in type code 17

X
X1
Module bus 86

X
X104
Encoder connection (KMS) 105
X156
Motor connection (KMS) 106
X2
Serial interface, service input "Release brake" 95
X20 TX
SERCOS 87
X21 RX
SERCOS 87
X3.1
Hybrid cables 97
X3.2
Hybrid cables 97
X37
Digital inputs/outputs 99
X38
Digital inputs/outputs 99
X50
E-Stop input 88
X51
Master communication SERCOS 89
X52
Status messages 89
X53
Control voltage output 90
X54
Output DC bus, equipment grounding conductor 90
X7
MultiMediaCard 98

Courtesy of CMA/Flodyne/Hydradyne ▪ Motion Control ▪ Hydraulic ▪ Pneumatic ▪ Electrical ▪ Mechanical ▪ (800) 426-5480 ▪ www.cmafh.com

Notes

Courtesy of CMA/Flodyne/Hydradyne ▪ Motion Control ▪ Hydraulic ▪ Pneumatic ▪ Electrical ▪ Mechanical ▪ (800) 426-5480 ▪ www.cmafh.com

Rexroth
Bosch Group

Bosch Rexroth AG
Electric Drives and Controls
P.O. Box 13 57
97803 Lohr, Germany
Bgm.-Dr.-Nebel-Str. 2
97816 Lohr, Germany
Tel. +49 (0)93 52-40-0
Fax +49 (0)93 52-48 85
www.boschrexroth.com

R911320924

Printed in Germany
DOK-INDRV*-KCU+KSM****-PR04-EN-P